POWER SOLUTIONS INTERNATIONAL

20L OPERATIONS & MAINTENANCE MANUAL

PSI POWER SYSTEMS

7610048-2 04/24

A Product by Power Solutions International

Wood Dale, IL

Power Solutions International, Inc (PSI)

201 Mittel Drive Wood Dale, IL 60191 USA

630-350-9400

REVISION CONTROL INFORMATION

Revision Level	Release Date	Change Description (s)
1	4/24/2023	Initial Release
2	8/23/2023	Update to engine break in procedure language

WARNING SUMMARY

- Failure to comply with the below warnings may result in serious injury to personnel.
- Avoid prolonged exposure to used oil.
- Wear protective clothing and waterproof gloves.
- Do not put oily rags in your pocket.
- Do not wear oil-saturated clothing.
- Wash work clothes frequently. Discard clothes and shoes that are soaked with oil and cannot be cleaned.
- In the event of personal injury, take first aid measures immediately.
- Always apply protective cream before work, which can help remove the oil when the skin is contaminated with mineral oil.
- Upon detection of skin irritation, seek medical treatment immediately.
- Do not use faulty or unsuitable tools.
- Stop the engine during maintenance or repair work.
- Do not touch hot parts of an engine that is running or that has just been stopped.
- Do not touch the engine when it is running.
- Let the engine cool down before carrying out any maintenance operation.
- Release the pressure in the fuel and cooling systems before disconnecting or removing hoses or associated parts.
- At operating temperature, the coolant is hot and pressurized. When the pressure is released the burning-hot liquid maybe transformed into fumes.
- Any contact with this burning-hot liquid or fumes may cause serious burns.
- Let the components in the coolant system cool down before draining the system.
- Only check the coolant level when the engine has been stopped.
- Slowly unscrew the filler plug to release the pressure.
- Hot oil can cause injury. Avoid contact with the skin.
- Sulfuric acid contained in batteries is toxic and corrosive. It can burn clothing and skin, or even cause blindness in case of contact with the eyes.
- When starting the engine, use ear protection.

Table of Contents

Introduction 7

How to Use This Manual 7

Engine Identification 7

Parts and Service 8

Service Literature 8

Certified Engine Emissions Information 9

Power Solutions International, Inc. 9

DEFECTS WARRANTY REQUIREMENTS: 10

(d) Emission Warranty Parts List. 11

Engine Systems 12

Rating Definitions 12

Engine Overview 13

Schematic Diagrams of 6M33 Gas Engine 13

6M33 series gas engine is equipped with one pressurized cooling circuit to cool: 15

Oil filters 17

Electronic Control Unit (ECU) and Electronic Parts Introduction 18

Safety instructions 22

Engine Lifting 23

Lifting device 23

Lifting the engine 23

Lifting Brackets 23

Engine Mounting 25

Accessories 26

Air Intake System 27

Exhaust System 27

Cooling System 28

Lubrication System 28

Fuel Systems 29

Governors 29

Oil Pressure 29

Coolant Temperature 30

Tachometer/Hourmeter 30

Gen Set Installation Recommendation 31

Operation Instructions 32

Preparations before Start 33

Engine Pre-Lube Break In Requirements 35

Starting the Engine 36

Natural Gas Fuel Systems 36

Stopping the Engine 36

Fuel Recommendations 36

Fuel Quality 36

Spark Plugs 36

Precautions for running in cold environments. 37

Stopping the Engine 37

Maintenance Instructions 38

General Safety Conditions for Maintenance 38

Maintenance Table 39
Maintenance Operations 40
Maintenance Operations 40
Storage Protection Instruction 55
Necessity of Anti-rust Protection 55
Storage Environment Requirement 55
Preparation before Storage 55
Instructions for Short-Term Storage 55
Necessary Materials 56
Long Term Storage（More Than Three Months） 57
Removal from Storage 61
Initial Running after Storage 62
Break-In Procedure 62
LONG-TERM STORAGE 63
Storing an engine over Six months: 63
Removing an engine from storage 64
APPENDIX: USING THE 4G SOFTWARE 65
Connecting to the Engine 65
Checking Faults 67
Appendix 71
Coolant Recommendation 71
Lubricant Oil Recommendation 72
Viscosity and temperature properties specification 73
Gas Recommendation 74
PSI Special Tools 75
Common Faults and Troubleshooting 78
Troubleshooting 78

Introduction

Power Solutions International is pleased that you have selected our engine for your requirements. Power Solutions International takes great pride in our tradition of quality products produced from our line of industrial alternative fuel engines.

Certain checks should be made to the engine prior to startup. Please read the Initial Start-Up inspection requirements in the Maintenance Section of this manual. If you have further questions, please contact your PSI account representative or Customer Support Engineer.

How to Use This Manual

This manual contains instructions on the safe operation and preventive maintenance of your PSI engine. We urge you to read this manual prior to start up or operation of the engine.

PSI engines are built with a variety of standard and/or optional components to suit a broad range of customer requirements. This manual does not identify equipment as standard or optional. All the equipment described in this manual may not be found on your engine or power unit.

Please pay special attention to the NOTES, CAUTIONS, and WARNINGS. WARNINGS remind you to be careful in areas where carelessness can cause personal injury. CAUTIONS are given to prevent you from error that could cause damage to the equipment. NOTES give you added information designed to help you.

The descriptions and specifications contained in this manual were in effect at the time of publication. Power Solutions International reserves the right to discontinue models at any time, or to change specifications or design with-out notice and without incurring obligation.

Engine Identification

An identification label is affixed to the to the flat section on the intake manifold near the throttle. The label (Figure 1) contains the engine model number, base engine part number, date of build, and PSI engine serial number. The PSI engine serial number is a unique number that identifies the engine from other PSI engines.

Figure 1

Engine Identification - continued

The engine model and PSI's serial number on the label will match the number stamped in the block (see Figure 2) are required when seekinginformation concerning the engine and/ordering replacement service parts.

The serial number is stamped on the side of the block, near the rear of the engine on the right side.

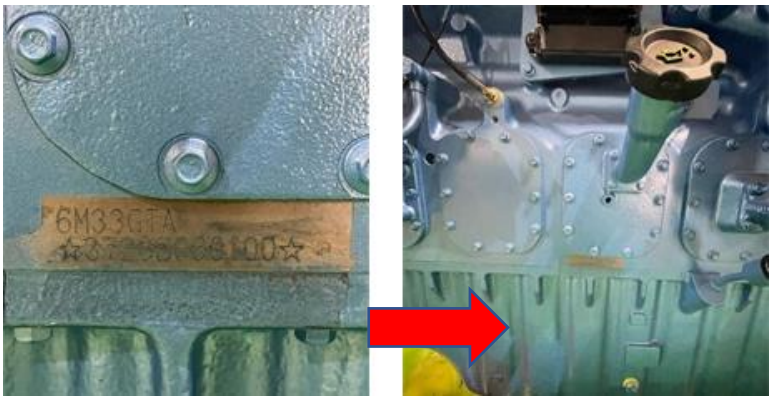

Figure 2

Parts and Service

Replacement parts can be obtained from Power Solutions International by calling the Aftermarket Parts Department at 888-331-5769 or parts@psiengines.com. The engine model and serial number will be required when seeking information and/or ordering parts.

Service and technical support for PSI engines can be obtained by contacting the Service Department at 888-331-5764 or via email at service@psiengines.com.

Service Literature

Additional operator manuals and service manuals for specific PSI engines can be obtained by contacting the Parts or Service Department at 888-331-5769 or via email at parts@psiengines.com.

Certified Engine Emissions Information

The **United States Environmental Protection Agency** and **Power Solutions International, Inc.** are pleased to explain the **emission control system warranty** on your 2023 PSI heavy duty large spark- ignition (LSI) engine. New LSI engines must be designed, built and equipped to meet the US EPA's stringent emission standards. Power Solutions International, Inc. must warrant the emission control system on your LSI engine for the periods of time listed below provided there has been no abuse, neglect or improper maintenance of your LSI engine.

Your emission control system may include parts such as the carburetor, regulator or fuel-injection system, ignition system, engine computer unit (ECM), catalytic converter and air induction system. Also included may be sensors, hoses, belts, connectors and other emission-related assemblies.

Where a warrantable condition exists, Power Solutions International, Inc. will repair your LSI engine at no cost to you including diagnosis, parts and labor.

MANUFACTURER'S WARRANTY COVERAGE

The 2023 and later large spark-ignition engines are warranted for **2500 hours** or **three years,** whichever occurs first (**3500 hours** or **five years** for high cost warranty parts). If any emission- related part on your engine is defective, the part will be repaired or replaced by Power Solutions International, Inc.

OWNER'S WARRANTY RESPONSIBILITIES

As the equipment and LSI engine owner, you are responsible for the performance of the **required maintenance listed in your owner's manual**. Power Solutions International, Inc. recommends that you retain all receipts covering maintenance on equipment and LSI engine, but Power Solutions International Inc. cannot deny warranty solely for the lack of receipts or for your failure to ensure the performance of all scheduled maintenance.

As the equipment or LSI engine owner, you should however be aware that Power Solutions International, Inc. may deny you warranty coverage if equipment or LSI engine or a part has failed due to abuse, neglect, improper maintenance or unapproved modifications. Your engine is designed to operate on Natural Gas and/or LPG. Use of any other fuel may result in your engine no longer operating in compliance with the US EPA’s emissions requirements.

You are responsible for presenting your equipment or LSI engine to a Power Solutions International, Inc. distribution center as soon as a problem exists. The warranty repairs should be completed by the dealer as expeditiously as possible. If you have any questions regarding your warranty rights and responsibilities, you should contact Power Solutions International, Inc. via telephone at **1-800-551-2938** or contact Power Solutions International, Inc. in writing at:

Power Solutions International, Inc.

201 Mittel Dr.
Wood Dale, IL
60191
or
Fax: 888-331-5764

DEFECTS WARRANTY REQUIREMENTS:

(a) The warranty period begins on the date the engine or equipment is delivered to an ultimate purchaser.

(b) **General Emissions Warranty Coverage.** Power Solutions International, Inc. must warrant each LSI engine to the ultimate purchaser and each subsequent owner that the engine is:

(1) Designed, built, and equipped so as to conform with all applicable regulations adopted by the US EPA; and

(2) Free from defects in materials and workmanship that causes the failure of a warranted part for a period of 2500 hours or three years, whichever occurs first (3500 hours or five years for high cost warranty parts).

(c) The warranty on emissions-related parts will be interpreted as follows:

(1) Any warranted part that is not scheduled for replacement as required maintenance in the written instructions required by subsection (d) must be warranted for the warranty period defined in Subsection (b)(2). If any such part fails during the period of warranty coverage, it must be repaired or replaced by the manufacturer according to Subsection (4) below. Any such part repaired or replaced under the warranty must be warranted for the remaining warranty period.

(2) Any warranted part that is scheduled only for regular inspection in the written instructions required by subsection (d) must be warranted for the warranty period defined in

Subsection (b)(2). A statement in such written instructions to the effect of “repair or replace as necessary” will not reduce the period of warranty coverage. Any such part repaired or replaced under warranty must be warranted for the remaining warranty period.

(3) Any warranted part that is scheduled for replacement as required maintenance in the written instructions required by subsection (d) must be warranted for the period of time prior to the first scheduled replacement point for that part. If the part fails prior to the first scheduled replacement, the part must be repaired or replaced by the engine manufacturer according to Subsection (4) below. Any such part repaired or replaced under warranty must be warranted for the remainder of the period prior to the first scheduled replacement point for the part.

(4) Repair or replacement of any warranted part under the warranty must be performed at no charge to the owner at a warranty station.

(5) Notwithstanding the provisions of Subsection (4) above, warranty services or repairs must be provided at all manufacturer distribution centers that are franchised to service the subject engines.

(6) The owner must not be charged for diagnostic labor that leads to the determination that a warranted part is in fact defective, provided that such diagnostic work is performed at a warranty station.

(7) The manufacturer is liable for damages to other engine components proximately caused by a failure under warranty of any warranted part.

(8) Throughout the emissions warranty period defined in Subsection (b)(2), the manufacturer must maintain a supply of warranted parts sufficient to meet the expected demand for such parts.

(9) Any replacement part may be used in the performance of any warranty maintenance or repairs and must be provided without charge to the owner. Such use will not reduce the warranty obligations of the manufacturer.

(10) Add-on or modified parts that are not exempted by the US EPA and may not be used. The use of any non-exempted add-on or modified parts will be grounds for disallowing a warranty claim. The manufacturer will not be liable to warrant failures of warranted parts caused by the use of a non-exempted add-on or modified part.

(d) **Emission Warranty Parts List.**

(1) Fuel Metering System
- (i) Fuel injection system
- (ii) Air/fuel ratio feedback and control system
- (iii) Carburetor system (internal parts and/or pressure regulator or fuel mixer or injection system)

(2) Air Induction System
- (i) Intake manifold(s) or air intake system *
- (ii) Turbocharger systems *
- (iii) Air filter

(3) Ignition Control System
- (i) Engine Wire Harness *
- (ii) Ignition coil and spark plugs

(4) Positive Crankcase Ventilation (PCV) System
- (i) PCV Valve.

(5) Catalyst System
- (i) Exhaust manifold
- (ii) Catalytic converter *
- (iii) Engine Control Module (ECM) *
- (iv) Electronic Pressure Regulator (EPR)

(6) Miscellaneous items Used in Above Systems
- (i) Vacuum, temperature, and time sensitive valves and switches
- (ii) Sensors used for electronic controls
- (iii) Hoses, belts, connectors, assemblies, clamps, fittings, tubing, sealing gaskets or devices, and mounting hardware
- (iv) Pulleys, belts and idlers

* Indicates high cost warranty item

.

Engine Systems

Rating Definitions

All PSI Power Systems engines are sold with a designated rating of standby, limited time running power (LTP), or prime. These ratings are defined as follows:

Standby Power: Capable of supplying emergency power for the duration of a utility power outage. Typical emergency standby power is available for a maximum of 500 hours per year at a maximum average load factor of 70%. The load should be variable and there is no overload (operation above nameplate) available for a standby rated product.

Limited Time Running Power (LTP): Capable of supplying power to a load for a maximum of 500 hours per year. Typical operation is a varying load up to the full LTP nameplate rating of the engine. There is no overload capability available with an LTP rated engine. Operation allowance up to 1500 hours per year may be available. Please consult the factory for an application review.

Prime Rated Power: Capable of supplying power to a variable load for an unlimited number of hours per year. Typical operation is a varying load with an average maximum load factor of 70% of the prime power rating. A 10% overload rating is available for a maximum of one (1) hour in every twelve (12) hours and will not exceed 25 total hours per year.

All Power Solutions International ratings are in accordance with ISO 3046 and ISO 8528. Ratings are based on standard fuel as defined by PSI Power Systems Technical Standard 56100019 – PSI Power Systems Fuel Standard.

Engine Systems - continued

Engine Overview

Schematic Diagrams of 6M33 Gas Engine

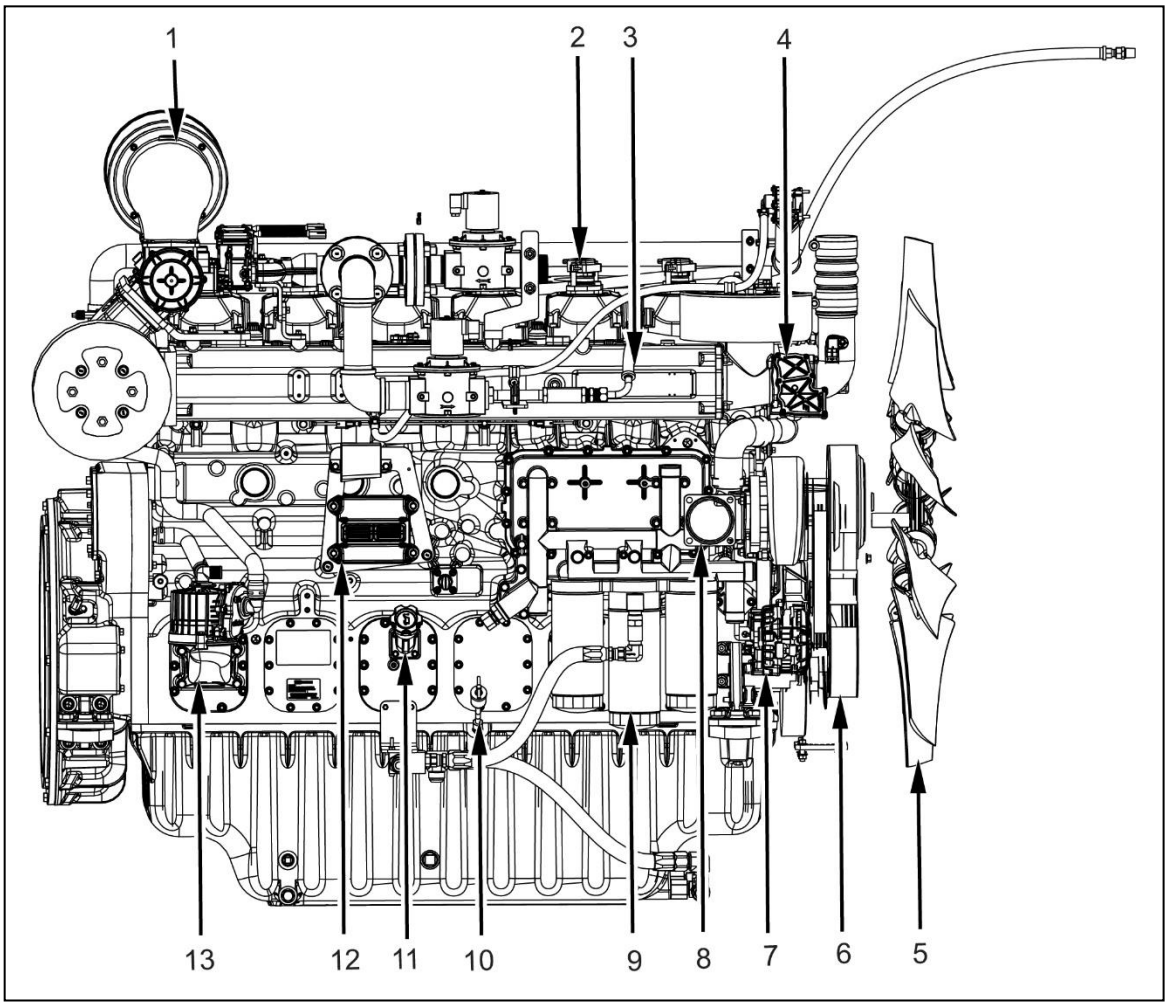

Figure 3 – Right Side View

1. Air intake filter
2. Ignition coil
3. Air intake manifold
4. Air intake throttle valve
5. Cooling fan
6. Alternator belt
7. Alternator
8. Coolant pump inlet
9. Lube oil filter
10. Lube oil dipstick
11. Lube oil filler cap
12. Electrical control module
13. Oil-Gas Separator

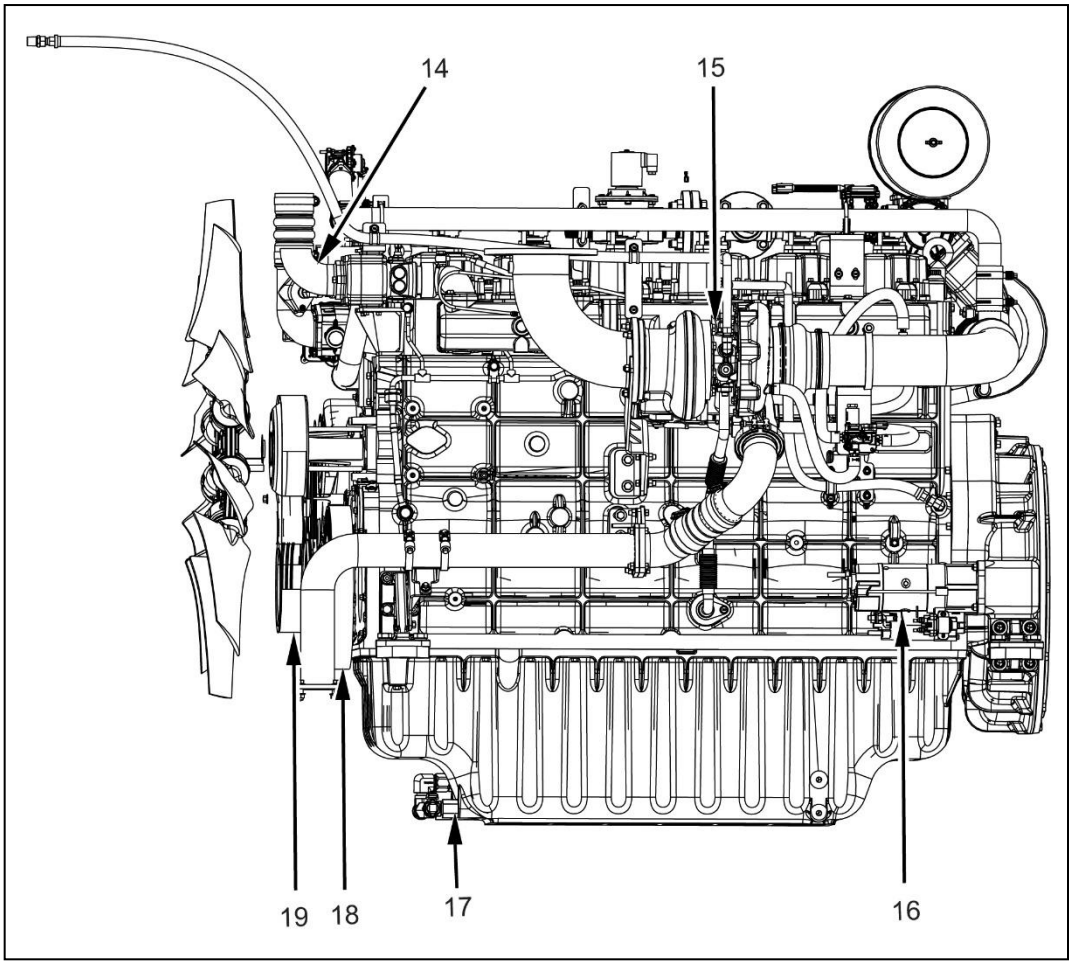

Figure 4 – Left Side View

14. Coolant Outlet Pipe
15. Turbocharger
16. Starter
17. Lube oil draining plug
18. Vibration damper
19. Cooling fan belt

Engine Systems - continued

Cooling Circuit

6M33 series gas engine is equipped with one pressurized cooling circuit to cool:

- Cylinder block and cylinder head
- Turbocharger
- Engine oil through oil cooler

The internal circuit is designed for self-degassing. To provide effective engine protection against freezing, chemical and galvanic corrosion, cavitation, and depositing, it is IMPERATIVE to use the recommended coolant as defined in **Coolant Recommendation**. The coolant pump is located at the front end.

Overall Layout of 6M33 Series Gas Engine Cooling Circuit

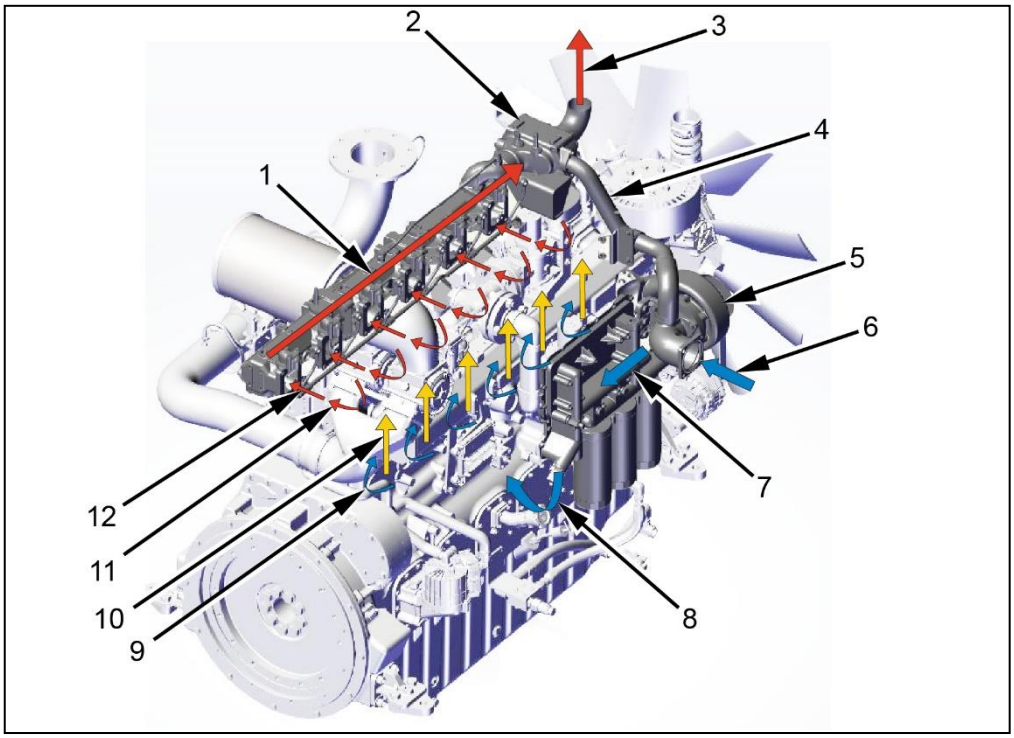

Figure 5 - Overall layout of Cooling Circuit (Right Side)

1. Water cooled exhaust manifold
2. Thermostat
3. High temp. coolant from thermostat to radiator
4. Coolant from thermostat (closed status) to pump
5. Coolant pump
6. Coolant from radiator to pump
7. Coolant flowing through lube oil cooler
8. Coolant flowing to block from lube oil cooler
9. Coolant flowing around liner
10. Coolant flowing from liner to cylinder head
11. Coolant flowing through cylinder head
12. Coolant flowing out of cylinder head

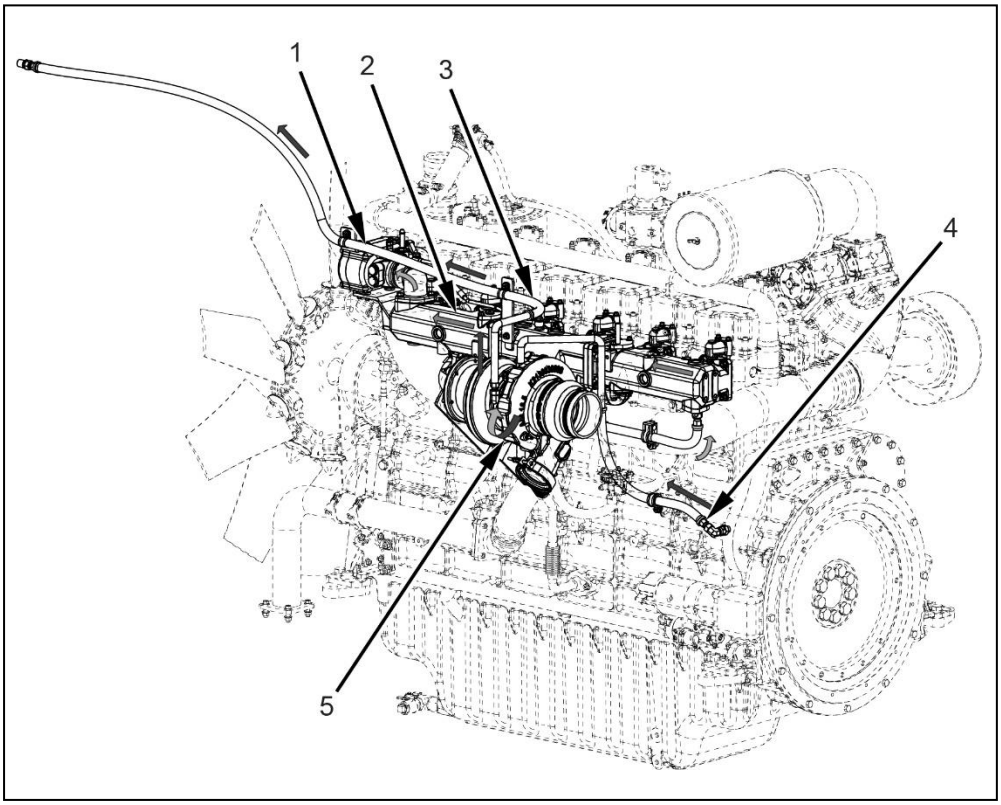

Figure 6 - Overall layout of Cooling Circuit (Left Side)

1. High temp. coolant from thermostat to radiator
2. High temp. coolant collection pipe
3. High temp. coolant from turbocharger
4. Coolant from cylinder block to turbocharger
5. Coolant flowing through turbocharger bearing housing

Engine Systems - continued

Lubrication System

6M33 Series gas engine is equipped with a lubrication system including one oil cooler.
The gear driving oil pump is located at the low front of the engine.

Engine parts are lubricated by pressurized oil. For the requirement of lube oil, see **Lubricant Oil Recommendation**.

Lubrication circuit

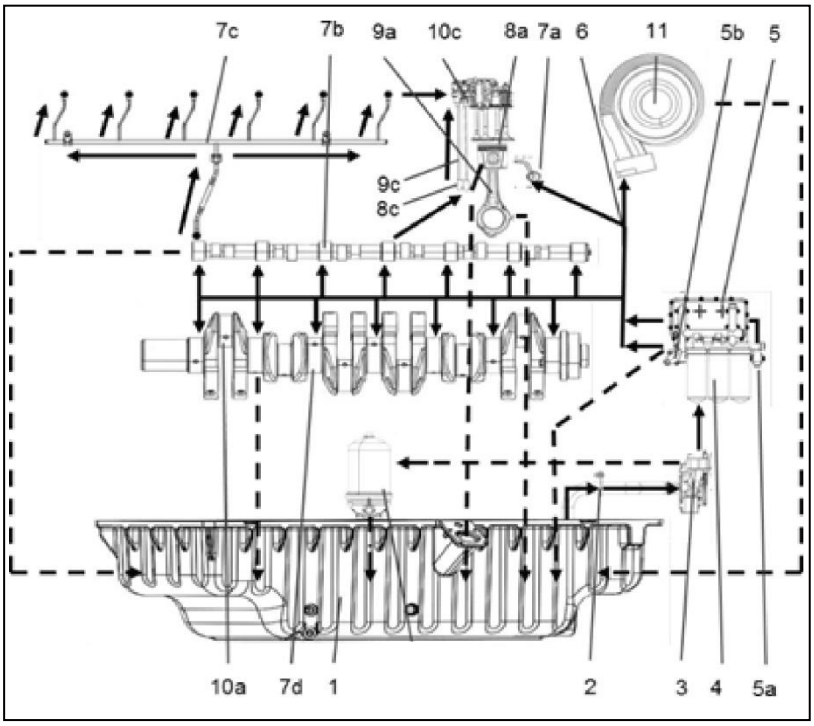

1-Oil sump
2- Suction strainer
3- Oil pump
4-Oil filter
5-Oil cooler
5a-Bypass valve
5b-Pressure relief valve
6-Main oil gallery
7a-Piston spray nozzle
8a-Piston
9a-Conrod;
10a-Conrod bearings
7b-Camshaft bearings
7c-Cylinder head lubricating oil line
8c-Tappet
9c-Pushrod
10c-Rocker arm shaft and rocker arm
7d-Main bearing
11-Turbocharger

Figure 7 - Overall layout of lubrication circuit

Oil filters

6M33 gas engine is equipped with a lubricating system including 3 full flow oil filters and one centrifugal oil filter.

a) "Full flow" filters.

These filters are equipped with a by-pass valve allowing the continuity of the engine lubrication even in case of a sudden clogging.

Electronic Control Unit (ECU) and Electronic Parts Introduction

ECU

Function:

ECU monitors inlet manifold pressure (MAP),inlet manifold temperature (MAT), engine speed, coolant temperature and exhaust oxygen concentration to control the action of electrical throttle valve, fuel metering, ignition timing and ignition orders after calculation.

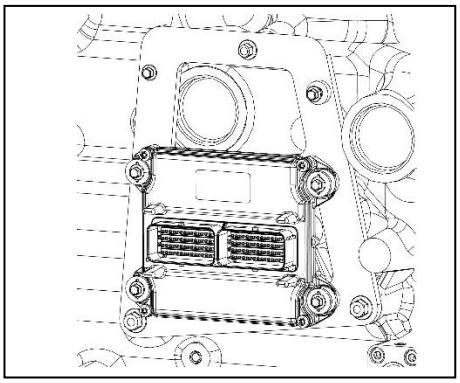

Figure 8 - Engine Control Unit

Technical parameters:

- ECU power supply rated voltage: 24V, normal operating voltage:8~32V

To prevent any damage to ECU, it is forbidden to carry out plugging operation when ECU is powered on.

Inlet temperature, pressure sensor (T/MAP)

Function:

T/MAP sensor integrates pressure and temperature measurement. Engine control unit (ECU) uses sensor signals to calculate engine's mixture air input.

Technical parameters:

- Applicable pressure: 20 kPa～ 300kPa;
- Applicable temperature: -40℃～ 130℃;
- Voltage: 4.75V～5.5V.

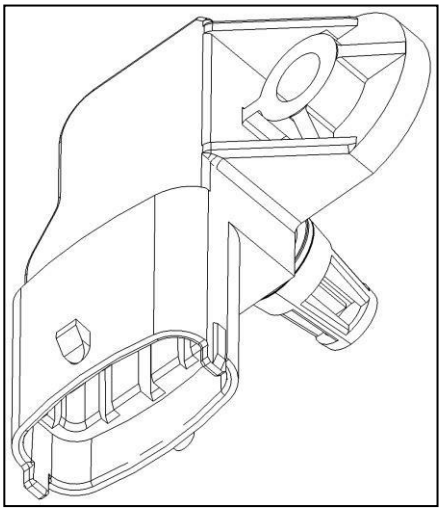

Figure 9 - Inlet temperature, pressure sensor

Engine Systems - continued

Camshaft signal sensor

Function:

Get revolution position of camshaft.

Technical parameters:

- Working temperature: 40℃～150℃;
- Working voltage:（5±0.25）V;
- Magnetic field allowable: ≤2kA/m;

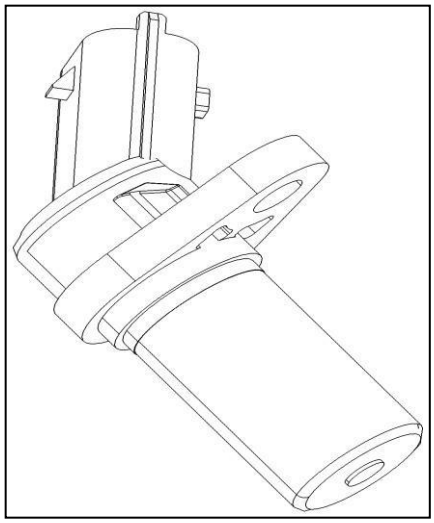

Figure 10 - Camshaft signal sensor

Coolant temperature sensor

Function:

Measure coolant temperature.

Technical parameters:

- Rated working voltage: （5±0.15）V;
- Temperature measuring range: -40℃～+140℃;

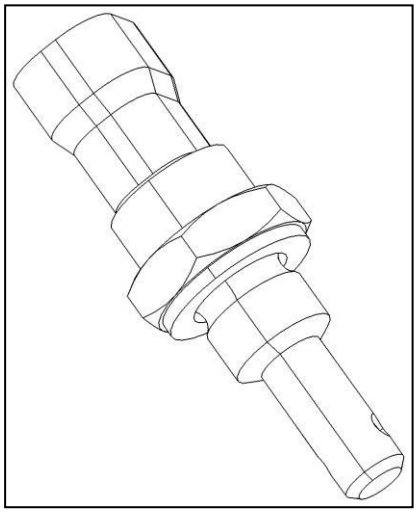

Figure 11 - Coolant temperature sensor

Oxygen sensor

Function:

The oxygen sensor is used to measure the oxygen content in the exhaust gas and convert the measured value into electrical signal and sent the signal to ECU. ECU adjusts the gas supply quantity.

Figure 12 - Oxygen sensor

Engine Systems - continued

Engine speed sensor （optional）

Function:

Engine speed sensor is mainly used to measure engine's revolution speed. We can use it to compare with engine's revolution speed of camshaft signal sensor.

Technical parameters:

- Magnetic field allowable: ≤2KA/m;

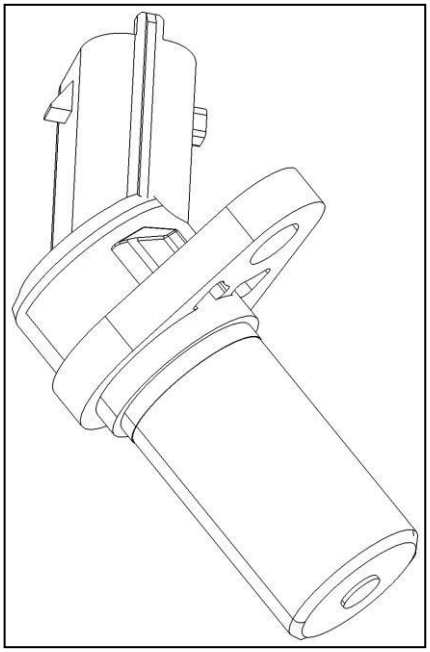

Figure 13 - Speed sensor

Electronic throttle

Function:

Electronic throttle is mainly used for controlling mixture flow, engine idling and rated speed. ECU controls the action of throttle, and its working stroke is limited to 10％～90％ (opening of butterfly valve) by ECU.

Failure of electronic throttle or bad contact of connectors will lead to unstable revolving speed.

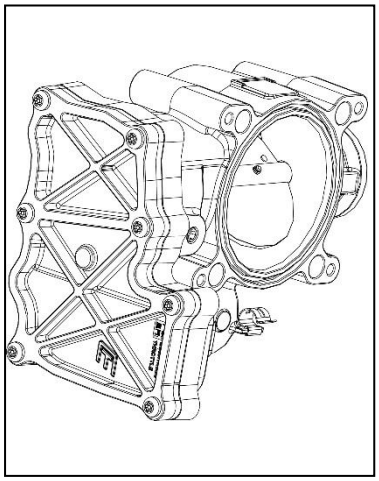

Figure 14 - Electronic throttle

Engine Systems - continued

Ignition coil

Function:

This system adopts independent cylinder ignition coil. ECU controls coil's charging time.

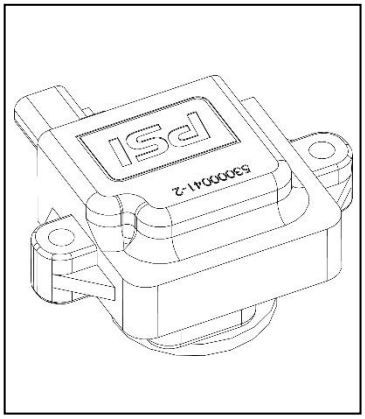

Figure 15 - Ignition coil

Ignition cable

Function:

Ignition cable is used to transmit high voltage signal generated by ignition coil to spark plug to generate electric spark for igniting gas air mixture.

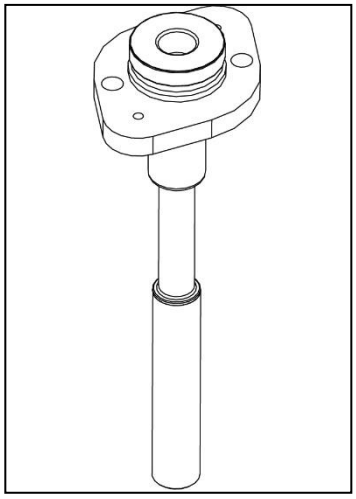

Figure 16 - Ignition cable

Spark plug

Function:

Spark plug is used to generate electric spark and ignite flammable air fuel mixture. This engine uses double-iridium spark plugs.

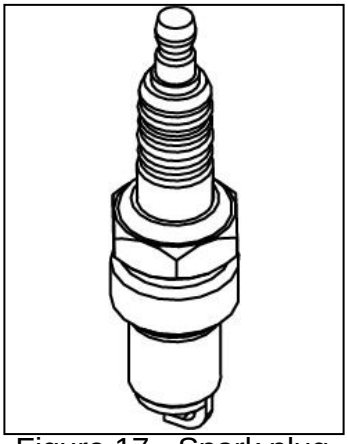

Figure 17 - Spark plug

Safety instructions

Users should carefully read and fully understand the safety instructions before installing and operating the gas engine.

The purpose of the installation instructions is to:

- Provide insight and advice in installing your engine.
- Establish proper conditions for no trouble operation.
- Avoid installation related problem and damage.

It is essential when installing and operating gas engines to comply with the local authority.

Notice:

After the gas engine is unpacked, firstly the user shall check the gas engine and its accessories as per the delivery packing list and check the engine appearance for damage and loose connections before handling the following tasks.

Check all parts to be self-provided are properly fitted.

Do not start the gas engine before it has been probably installed. When the gas engine run in an enclosed environment, keep it well-ventilated to ensure that the exhaust gas is ventilated to the outside ambient.

For the Gen Set installation, please refer to the relevant **Gen Set Installation Manual**.

Engine Systems - continued

Engine Lifting

Lifting device

- Always use the lifting device to lift the very heavy parts that is unsuitable for carrying by hand.
- Check the lifting device status regularly such as hook and chain.
- Do not use unsafe tools. Do not use the tools before you are familiar with it.

Lifting the engine

The 6M33 gas engine's net weight is approx.2110Kg. The capacity of the lifting device will be reduced when the angle between the chain and the engine lifting eye falls below 90°.

- Use a lifting device with the crossbars as illustrated.
- Avoid any contact between the chains and the engine parts.
- The lifting hook and the engine lifting eye should be connected tightly.

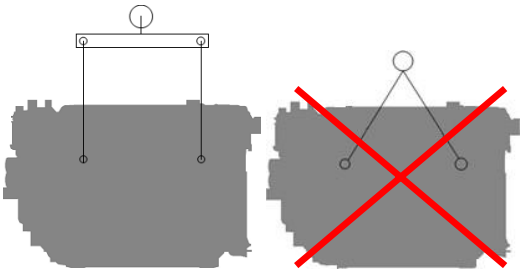

Figure 18 – Lifting of the engine

WARNING: There is the risk of death or injury due to heavy suspended loads.

Lifting Brackets

Note: Please refer to the Gen Set Manual when lifting the generator.

Use both lifting eyes fitted on the gas engine to lift.

WARNING: During the lift operation, never stand under the suspended engine or parts to avoid the imminent danger of injury or death. Place the load on the ground before leaving the working site. Never work in the swing radius of crane.

Engine Systems - continued

The two lifting eyes of 6M33 series gas engine are illustrated as following:

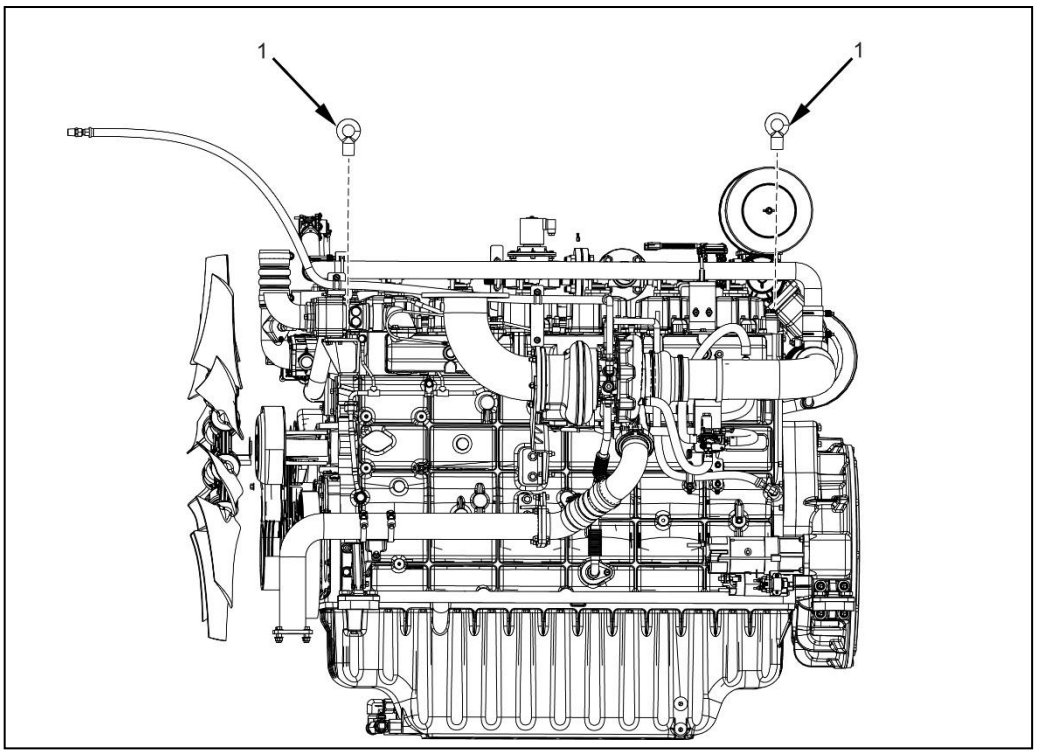

Figure 19 - Lifting eyes

1. Front lifting eye
2. Rear lifting eye

Engine Systems - continued

Engine Mounting

To ensure the installation durability, pay attention on the following criteria:

- All the engine's mounting brackets should be used
- Vibration absorber should be arranged to reduce vibration from the engine to its chassis.The mounting brackets of 6M33 series gas engine are illustrated as following:

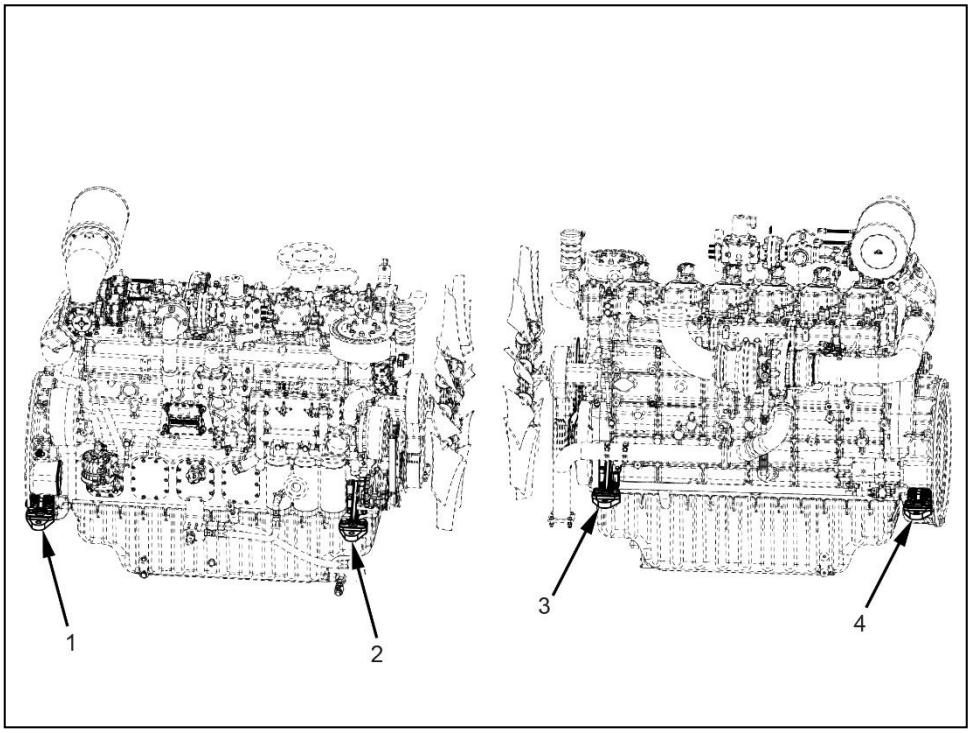

Figure 20 - Engine brackets

1. Right rear bracket
2. Right front bracket
3. Left front bracket
4. Left rear bracket

Engine Systems - continued

Accessories

To ensure engine durability and performance, the accessory installation must meet the following items:

- During installation, add proper O-ring sealing in the cooling system pipes. As figure 21, the O-ring should be arranged in the flange before connecting pipe with coolant pump inlet.

- When connecting pipe of air and cooling system, be sure to use the high-quality rubber pipe to avoid the unnecessary leakage.

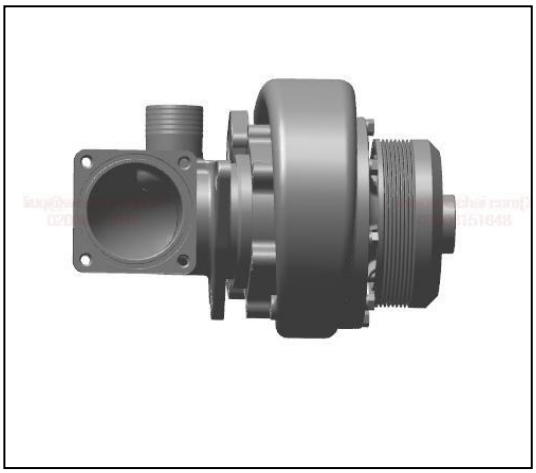

Figure 21 - Coolant pump inlet port

Engine Systems - continued

Air Intake System

If the gas engine is without the air filter, operator should fit the air filters and filter status indicator. The air intake system must avoid entry of following materials:

- Water or rain.
- Dust.
- Exhaust gas.

The air filter should be far enough from the heat resource.
The allowed temperature increasing before the turbocharger compressor inlet is 5℃.
The filter should be matched with indicator to monitor its resistance status.
The initial resistance of the new filter should be ≤1.2 kPa. The resistance of the dirty filter should be ≤4 kPa.

Exhaust System

The exhaust system must meet the following requirements:

- Exhaust back pressure must not exceed 13kPa.
- Exhaust system components should not exert excessive stress on the exhaust manifold or turbocharger. The exhaust system parts' weight, inertia, relative movement between components, and dimensional change due to thermal load can exert excessive stress.
- Avoid the exhaust pipe having sharp turns. The bend radius of the pipe should be big as much as possible and sharp corner is not allowed.
- When the exhaust pipe is close to the intake pipe, rubber parts, plastic parts, etc., an insulation board must be added in the middle and the distance should be increased as much as possible.
- The exhaust system must be able to prevent rain, snow, or splashed water from entering the engine.
- The exhaust gas must be ventilated to ensure engine performance and the operator's health.
- Review the technical specifications document available from PSI for maximum allowable exhaust temperatures.

Engine Systems - continued

Cooling System

To ensure excellent engine life and cooling performance, the installation of the radiator must meet the following criteria:

- When installing the radiator, install the vibration absorber.

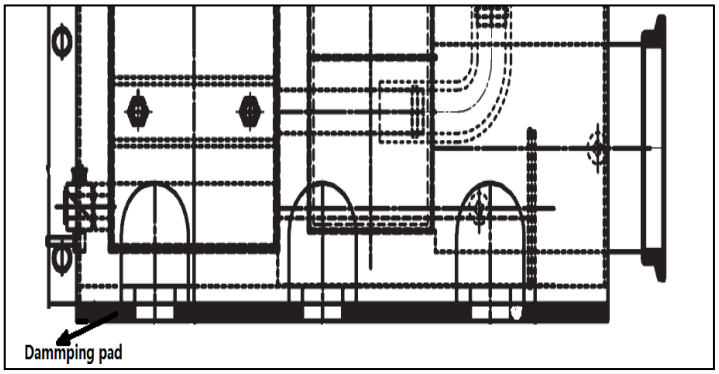

Figure 22 - Vibration absorber arrangement

- If the engine works in a soundproof box, sealing rubber should be installed around the radiator to prevent the hot air beyond the engine from flowing back into the cool air entrance.
- Radiator grounding measures must be taken to eliminate potential difference and prevent electrical corrosion (aluminum radiator do not require).
- The surface of the radiator should not be covered by other components, and the direct wind crossing area should be greater than 80% of the radiator surface.
- The minimum diameter of the coolant pipe between the engine and radiator is 45mm.

Lubrication System

Users must follow the requirements in **Lubricant Recommendation.**

To get a good performance of the engine lubricant system, the engine should be mounted on the chassis within a permitted angle. The angle limitation is 5°in front-rear direction and 15°in left-right direction.

Engine Systems - continued

Fuel Systems

The fuel system installed on your engine operates with a Direct Electronic Pressure Regulator (DEPR) (two per cylinder bank) and a diaphragm style variable Venturi mixer as shown in figure 23. The DEPRs regulate the fuel pressure being delivered to the mixers. These parts are not adjustable and should not be tampered with. Proper inlet fuel pressure is critical to the proper operation of the fuel system and engine; you should the review the pressure, volume, and BTU recommendations prior to commissioning the engine.

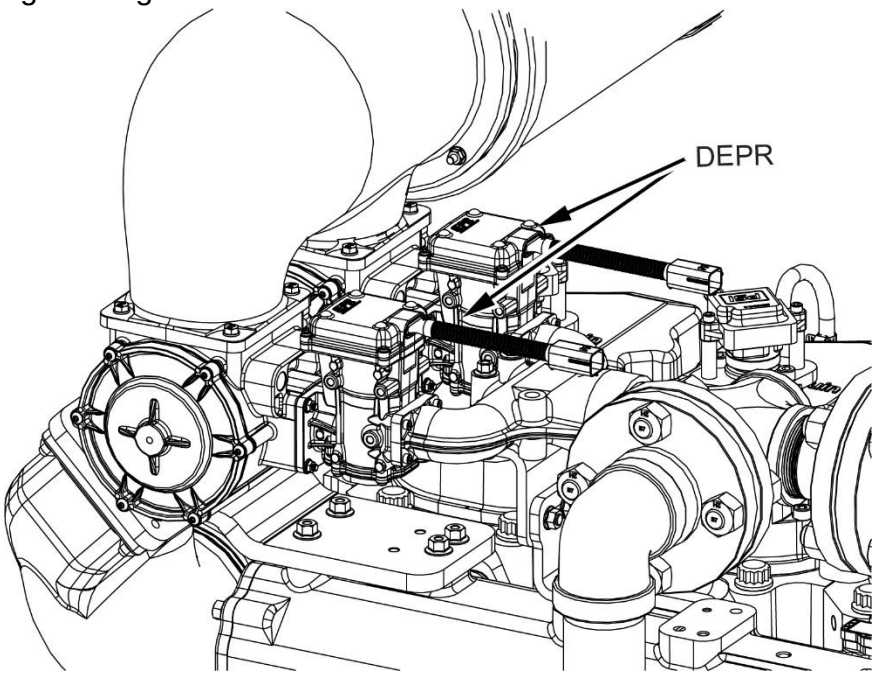

Figure 23 - Direct Electronic Pressure Regulator (DEPR)

Governors

PSI engines have an isochronous governor installed. The governor controls the movement of the throttle via a 0–5-volt signal and a ground provided by the Engine Control Module. The throttle allows the correct amount of air to enter the engine; this movement is monitored by using two internal throttle position sensors. The ECM monitors various engine sensors to determine what the correct throttle position should be.

Oil Pressure

The oil pressure reading shows the engine lubrication system pressure in pounds per square inch (psi) and should be checked frequently to ensure that the system is functioning correctly. Normal operating pressure is 80-94 psi at 1800 RPM at normal operating temperature (approximately 175° F). Should the pressure fluctuate or drop below 29 psi, stop the engine, and find the cause. Do not operate the engine at lower-than-normal oil pressure.

CAUTION: Do not continue to operate your engine below the normal operating range. Severe engine damage could occur.

Engine Systems - continued

Coolant Temperature

The coolant temperature reading will indicate overheating which may arise from low coolant level, plugged radiator, loose fan belt or faulty thermostat. Coolant level should be checked daily.

CAUTION: If the engine continues to overheat, have the cooling system checked and serviced.

Voltage Reading

The PSI Energy product operates on a 24-volt electrical system. The voltage reading indicates the battery charging voltage. If the meter consistently indicates less than 26 volts or more than 30 volts under normal operating conditions, you should have the engine electrical system checked by a qualified service technician.

Tachometer/Hourmeter

The tachometer indicates the engine speed in hundreds of revolutions per minute (rpm). It serves as a guide to ensure that engine speed is set correctly.
The hour meter records the hours of operation and is used to determine when periodic maintenance is required.

Engine Systems - continued

Gen Set Installation Recommendation

Installer must choose the proper location to avoid noise pollution. If the location is not proper, enclosure must be used for noise reduction. Also, the proper exhaust silencer must be used if necessary.

- The gen set room should be well ventilated. The foundation should be solid and conform to local code.
- When installing, the vibration absorbers are evenly placed under the unit chassis. The unit levelness is recommended to be measured with the level gauge.
- When building a room for gen set, the proper device for lifting should be embedded in the roof for future maintenance.
- There should be enough maintenance and inspection space around your gen set.
- The room should be equipped with fire extinguishers.

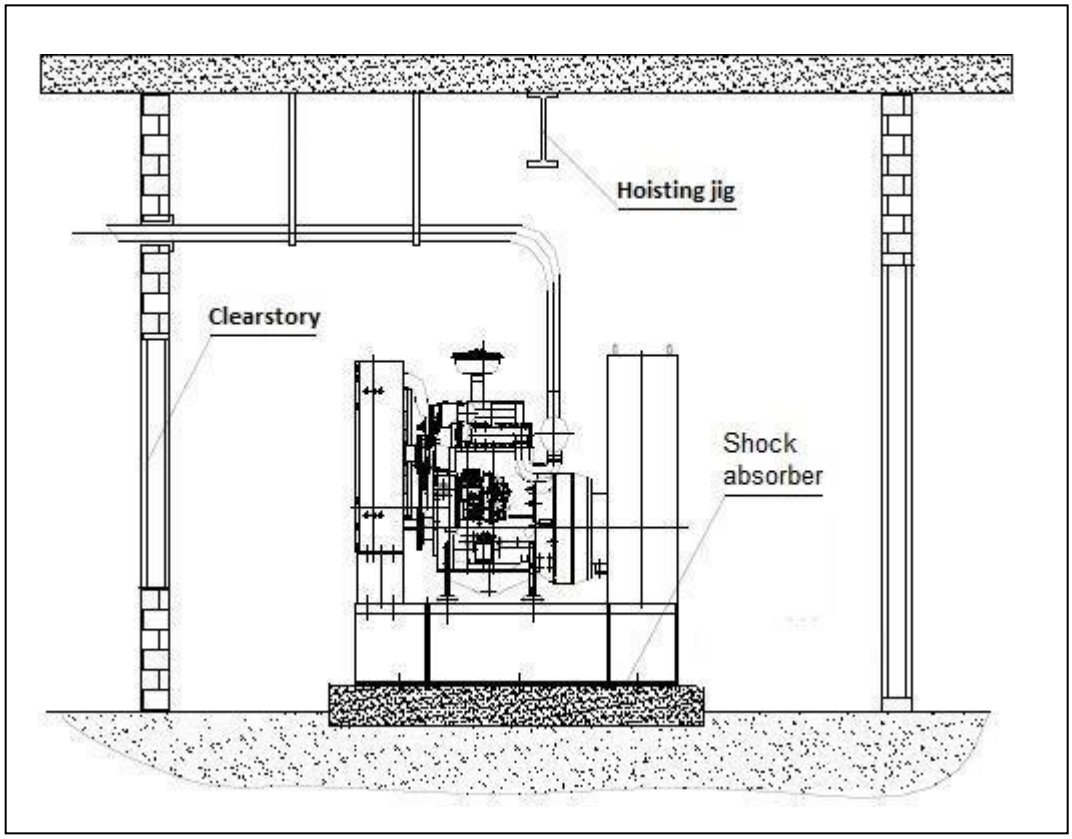

Figure 24 - Gen Set installation

Operation Instructions

People will be required to wear Individual Protection Equipment (IPE) and use correct tools following official standards.

Make sure that the engine is correctly protected regarding its environment conditions.

Take the necessary measures for the emergency shut-off of the gas or air supply to prevent from over-speed risks.

- Check the cleanliness of circuits.
- Check for free circulation of gases in exhaust ducts.
- Check the natural gas supply.
- Check coolant level and fill if necessary.
- Check oil level and fill if necessary.
- Check air-filter clogging indicator.
- Check the natural gas system.
  - Ensure no electrical equipment, fire, and heat source near the gas pipe.
  - Ensure the engine power is closed.
  - Visually check if the gas pipeline leaks.
  - Open the gas valve, let the gas pass by the gas pipeline
  - Measure gas leakage in the pipe joint from gas source to mixer.

Operation Instructions - continued

Preparations before Start

Oil

- Adding of engine oil
  - Open the oil filler cap and add the engine oil.
  - Using the dipstick to check the oil level.

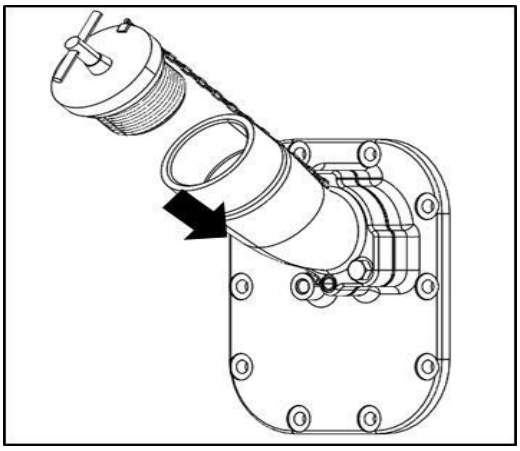

Figure 25 - Adding of engine oil

To achieve proper engine performance and durability, it is important that you use only engine lubricating oils of the correct quality in your engine. Proper quality oils also provide maximum efficiency for crankcase ventilation systems, which reduces pollution.

A multi-viscosity, low-ash gas engine oil should be used. Straight weight engine oils are not recommended. Do not use oils that are formulated only for use in diesel engines.

SAE No.	Sulfated Ash Content by Weight	Engine Oil Capacity (min/max)	Recommended Oil
15w-40	0.25 - 0.5% by wt. API CD/CF or higher	51 qts / 65.5 qts	Chevron HDAX 5200 Low Ash Gas Engine Oil

Coolant

- Adding of coolant
  - The coolant is mixed from treated clean water and anticorrosive agent or antifreeze. Ensure to strictly abide by the specification of the additive manufacturer during mixing.
  - Recommend pumping coolant in through the drain port at the bottom of the radiator to help with degassing/bleeding the air from the cooling circulation system.
  - When opening the filler cap with the pressure relief valve and exhaust button, press the exhaust button first if the engine is still hot. It is prohibited to add a large amount of coolant when the engine is still hot for it will cause damage to the parts due to sudden temperature change. Start the engine, keep adding coolant until the liquid level reaches the specified position and maintains stable. And finally close the filler cap.

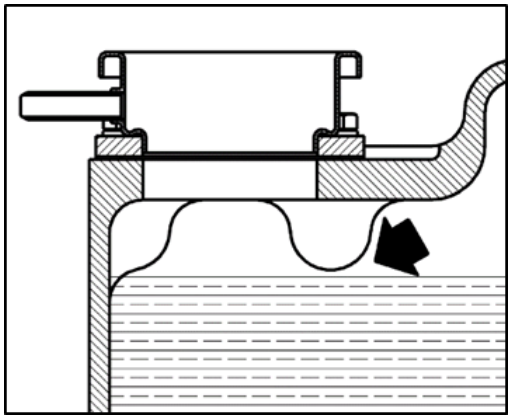

Figure 26 - Adding the coolant

The cooling system must be filled with a 50/50 mix of coolant and distilled water. A NAPS-free coolant (free from nitrates, amines, phosphates, and silicates) should be used. The coolant should be an organic acid technology (OAT) long-life variety, such as Chevron Delo XLC.

Variety	Freezing/Boiling Point (°F)	Recommended Type	Engine Coolant Capacity (gal)
OAT Long-Life Engine Coolant	**-34 / 265**	**Chevron Delo XLC Antifreeze/ Coolant 50/50 Mix**	**46.8 gal**

Make sure to check the coolant regularly, and change it as required to avoid damage to the cooling system. The cooling system must be filled with a 50/50 mix of coolant and water.
Do not use undiluted antifreeze or straight water in the cooling system.

Engine Pre-Lube Break In Requirements

The minimum requirements for engine start-up and break-in are listed below. These steps are necessary to ensure proper break-in of engine components and minimize premature engine wear.

It is the responsibility of the OEM to ensure the engine break-in procedure is followed during the production process and initial startup at your facility.

Time (Total Min)	Time (Min)	Engine Speed (RPM)	Engine Load	Test Procedure
Before Startup	2	0	0%	Pre-lubricate engine prior to initial startup using external pump.
0 - 15	15	1800	0%	Check engine coolant level and oil pressure at startup. Do not start engine at idle speed for initial break-in.
				Run the engine until the coolant temperature stabilizes. Continue to run for an additional 5 min.
15 - 45	30	1800	50%	Break-in
45 - 60	15	1800	75%	Break-in
60 - 70	10	1800	100%	Load check
-	-	1800	0-100%	Optional customer requested performance testing
End of Test	10	1800	0%	Cool down
Total	90			

External Pre-lubrication pump and fitting to connect to the QuickFit oil management system are available from PSI service parts department.

Operation Instructions - continued

Starting the Engine

WARNING: All internal combustion engines give off various fumes and gases while running. Do not start or run the engine in a closed or poorly ventilated building where exhaust gases can accumulate. Avoid breathing these gases as they may contain poisonous carbon monoxide, which can endanger your health or life if inhaled steadily for even a few minutes.

CAUTION: If the engine stalls or falters during starting, wait 3 to 4 seconds before re-engaging the starter. This will prevent possible damage to the starter and the engine. DO NOT operate the starter continuously for periods longer than 10 second at a time. An interval of at least 1-minute should be observed between cranking periods to protect the starter from overheating.

Natural Gas Fuel Systems

Turn on the gas supply to the engine. Turn the ignition key to the START position. After the engine starts return the key to the ON position.

Stopping the Engine

Remove all load from the engine. Return the engine to idle speed (if available) and run engine for a few minutes at idle to allow the coolant and oil systems to cool down before turning the ignition switch to the OFF position.

WARNING: Avoid injury when checking a hot engine. Allow the engine to cool down before removing the radiator cap.

CAUTION: Before restarting the engine ensure that both the coolant system and the engine oil level have been checked and re-filled if necessary.

Fuel Recommendations

Fuel Quality

PSI engines are designed to operate on pipeline quality natural gas with a LHV of approximately 920 BTU/scf. LPG engines and fuel systems are designed to operate on HD-5 or HD-10 specification LPG fuel. Fuel other than HD-5 or HD-10 may cause harm to the engine's emission control system and a warranty claim may be denied on this basis if operators can readily find the proper fuel. Use of any other fuel may result in your engine no longer operating in compliance with EPA emissions requirements. Reference to PSI doc #56100019, PSI Power Systems Fuel Standard.

Spark Plugs

Always use the spark plugs that are part of your preventative maintenance (PM) kit for your engine. Hotter or colder plugs, or similar plugs that are not exact equivalents to those supplied with your PM kits, can cause permanent engine damage, reduce the engines useful life, and cause many other problems such as hard starting, spark knock and run-on. Installing new spark plugs regularly is one of the best ways to keep your engine at peak performance.

Operation Instructions - continued

Precautions for running in cold environments.

- Lubricating oil: Choose lubricating oil of different viscosities depending on the seasons.
- Coolant: Add antifreeze additive into the cooling system and choose the coolant of different grades depending on the ambient temperature.
- Start: The auxiliary starter can be adopted, if necessary, in winter. After starting the engine, only operate the engine with load when the oil pressure and water temperature are normal.
- Before the cold season begins, be sure to check the electrolyte liquid level, viscosity, and battery voltage. If the engine is not going to be operated for a long time under very low temperatures, the battery should be removed and stored in a warmer room.
- Shut-off engine: When shutting off the engine in a cold climate, unload the engine first and then run the engine at idling speed for 3 to 5 minutes. And then stop the engine after the water and oil temperatures decrease.

Operation Instructions - continued

Stopping the Engine

Avoid shutting down the engine at full load. Before the shut-down, engine load and should be reduced, and the engine should operate at low-load condition for 3 to 5 minutes. This allows the piston, cylinder head, liner, bushing, and turbocharger to cool down, avoiding cylinder and bearing damage. This is particularly important for turbocharged engines because the bearing and oil seal in the turbocharger can be affected by the high temperature of the exhaust gas. When the engine is running, the heat will be transferred away by the cycling lubricating oil. When the engine shuts down suddenly, the turbocharger temperature will increase greatly and cause the bearing or the oil seal to fail.

- Turn the key switch to position “0” or press the stop button to stop running of engine, till the engine stops rotation or the speed indicator on the instrument panel points zero.
- For the engines that don't use anti- freeze in the engine coolant, drain the coolant after shut-down in cold weather to prevent freezing damage to the engine. The draining valve under the oil cooler can be used to drain the water inside the engine. The drain plug on the radiator should also be removed to discharge the coolant in the radiator.

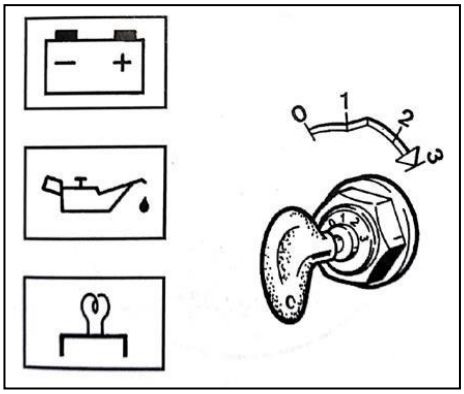

Figure 27 - Switch

Maintenance Instructions

General Safety Conditions for Maintenance

SAFETY WARNING

Users should carefully read the safety instructions before installation and operation of the engine.

Safety conditions for preventive and corrective maintenance operations are intended tocheck.

- Engine and generator alignment.
- The tightness of the entire engine unit on the frame.
- The tightness of the couplings and all elements transmitting power.
- The isolation and condition of electrical equipment.
- The condition and tightness of electrical connections.
- Control of gas, lubricating oil, and coolant levels.
- Operation of the alarm safety devices.
- Replacement of gas, lubricating oil, and air filters.

Maintenance Instructions - continued

Maintenance Table

PSI ENERGY ENGINE MAINTENANCE GUIDELINES			
56100029 Revision: 6 2023-03-22	Service Intervals		
20L, 32L, 40L, and 53L Standby	**Initial 50 Hour Service[1]**	**Annual Service**	**Every Two Years**
Check for fluid leaks	X	X	
Check engine oil level	X	X	
Check coolant level	X	X	
Inspect drive belts for tension, cracks, splits, or glazing	X	X	
Inspect air cleaner filter element, replace as needed	X	X	
Inspect electrical system and harnesses for cuts, abrasions or wear	X	X	
Inspect all vacuum lines and fittings for cracks, breaks or hardening	X	X	
Inspect coolant hoses for cracks, swelling or deterioration	X	X	
Inspect fuel shut-off valves for leaks and proper operation	X	X	
Inspect gas piping and hoses for leaks or damage	X	X	
Check air induction piping for leaks	X	X	
Inspect automatic belt tensioners, replace if necessary	X	X	
Check intake manifold for vacuum leaks	X	X	
Inspect exhaust manifold for leaks	X	X	
Inspect exhaust piping for leaks	X	X	
Inspect O_2 sensors and harness for damage/performance	X	X	
Inspect catalyst for mechanical damage and performance	X	X	
Sample engine oil as needed	X	X	
Change engine oil and filter[2]	X	X	
Adjust intake and exhaust valve clearance	X	X	
Clean debris from radiator core	X	X	
Tighten all hose clamps on CAC piping boots	X	X	
Drain LPL vaporizer oil build up (if LP fuel system is installed)	X	X	
Inspect ignition coils and harness		X	
Replace spark plugs			X
Drain, flush, and replace engine coolant[2]			X
Replace fan and water pump belts			X
Replace ignition coils			X
Replace throttle bodies			X

1: Perform after initial 50 hours of engine operation, and 50 hours after top end or overhaul service

2: Oil and coolant change intervals can be extended only with a regularly scheduled sampling program

The service life of an engine is influenced by several factors including correct installation, operating at proper rated load, proper service and inspection by trained technicians, and the use of approved engine oil, filters, and coolant.

Maintenance Operations

Maintenance Operations

- Check the coolant level
  - Inspection window

    Check the level by eyes.

    CAUTION: If coolant is not enough, shut off engine and after engine has cooled, add coolant through radiator filler cap.

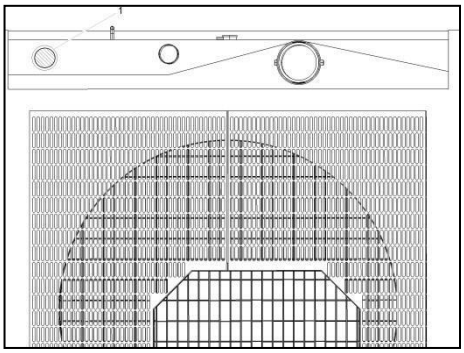

Figure 28

  - Fill the coolant

    When filling coolant into the engine which is in static state, please loosen the screw plug, wait until the gas in the coolant pump is exhausted and the coolant overflows, screw the screw plug back to its original state.

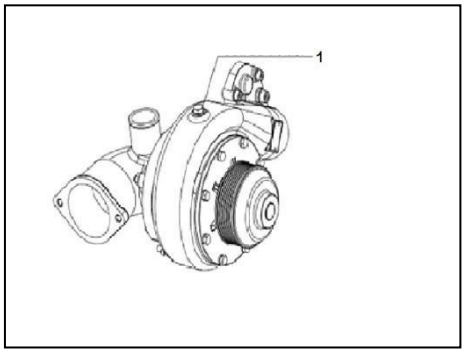

Figure 29

- Check the oil level
  - Open hood.
  - Remove dipstick and wipe cleanwith a lint-free cloth.
  - Insert dipstick until fully seated.
  - Remove dipstick and check oil level at 3 mm below the H on the dipstick.
  - If oil level is in L mark, add oil through oil cap.

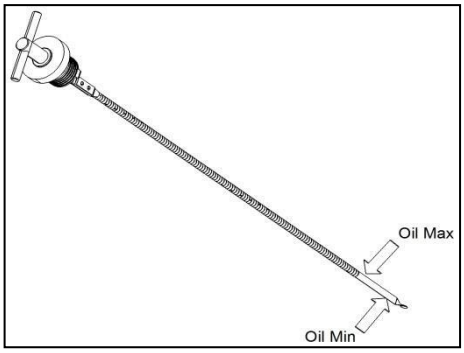

Figure 30

CAUTION: After engine stopped, wait at least 5 minutes before checking the oil level.

If oil level is below minimum mark, do not start the engine.

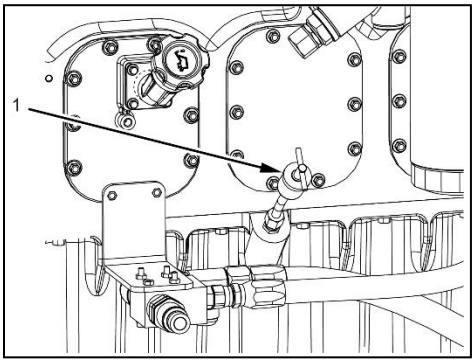

Figure 31

- Check the belt

  The belt is automatically tensioned with a tensioner.

  - Inspect the alternator belt and the fan drive belts for wear and for cracking. Replace the belts if the belts are not in good condition (Example B below).
  - Slippage of loose belts can reduce the efficiency of the driven components. Vibration of loose belts can cause unnecessary wear on the following components:

    Belts, pulleys, and bearings.

  CAUTION: If the belts are too tight, unnecessary stress is placed on the components. This reduces the service life of the components.

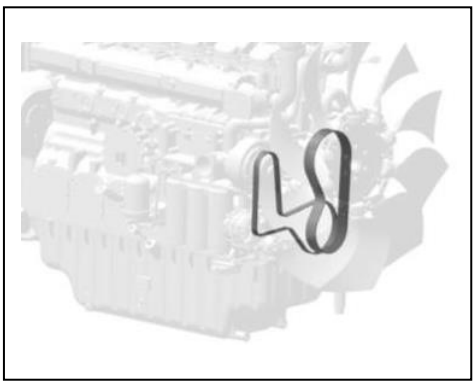

Figure 32

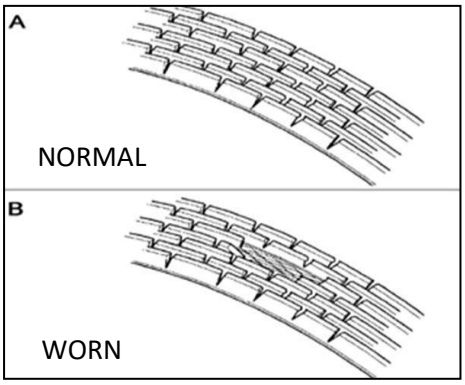

Figure 33

- Check the fan

  Check the fan to be sure it is securely mounted; tighten the cap screws as necessary. Check the fan for wobble or bent blades.

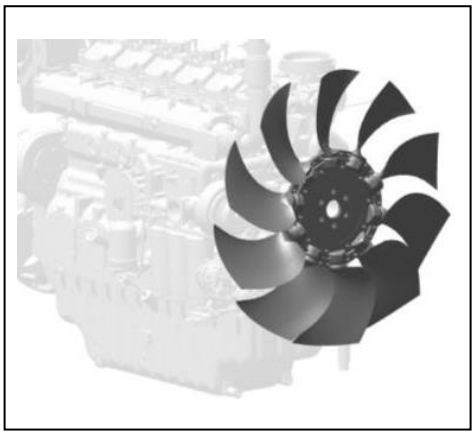

Figure 34

Maintenance Instructions - continued

- Replace the engine oil
  - Run engine to warm oil slightly.
  - Stop engine.
  - Loosen drain nut. Drain oil into the container.

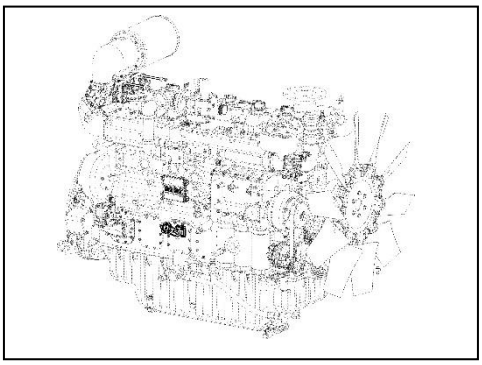

Figure 35

- Check the oil level after finished.

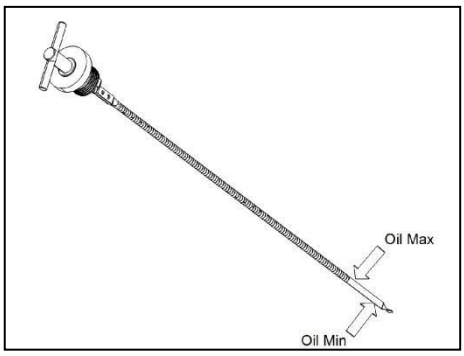

Figure 36

- Start engine and let it be idle for 1 minute. Check for oil leaks at engine oil filter. Tighten only enough to stop leaks.

CAUTION: Be careful when draining hot engine oil. Hot engine oil can cause burns to unprotected skin.

- Clean the air filter, replace if needed
  - Use 0.5MPa (73 psi) clean air blow and sweep the dust on external filter element from inside to the outside, and DO NOT wash the filter element with oil or water.

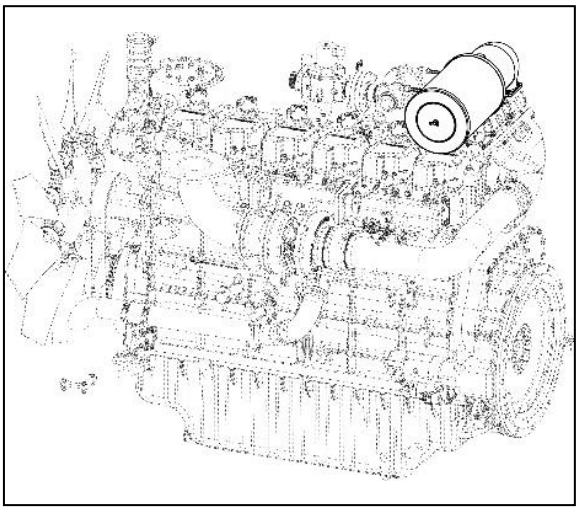

Figure 37

  - Release wing nut (1) and washer (2).
  - Remove cover (3) and air filter (4) from flange of intake housing (5).
  - Verify that there are no objects in the flange of the intake housing (1) and clean it.
  - Place new air filter (4) with cover (3) onto intake housing (5).
  - Install washer (2) and wing nut (1). Tighten wing nut (1).

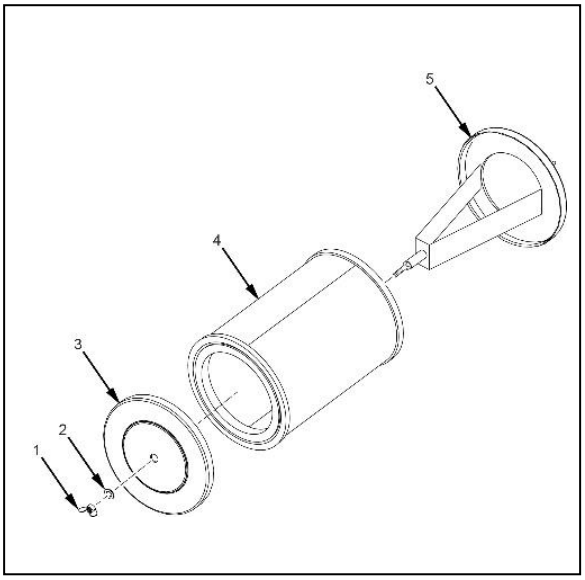

Figure 38

Maintenance Instructions - continued

- Clean the oil-gas separator element
  - Check whether the drain valve is clear; clean it up if it is blocked or dirty.

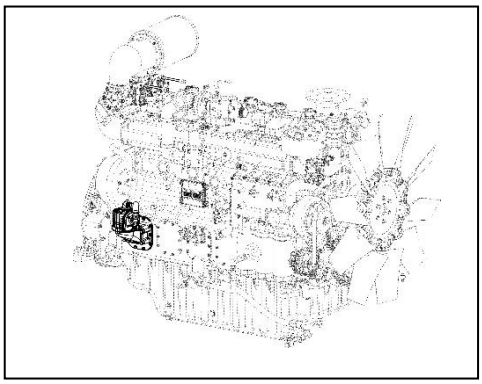

Figure 39

- Replace oil cartridges (to be done with EVERY oil replacing)
  - Remove oil filters by special tool.
  - Clean filter seat.
  - Replace oil cartridges (to be done with EVERY oil change)

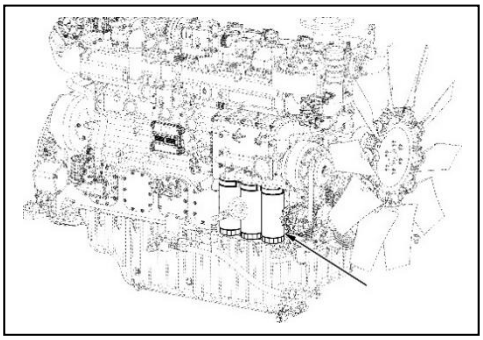

Figure 40

  - Lubricate seal ring on new filter with a small amount of clean engine oil.
  - Tighten the filter by hand, till the seal ring meets the seat.
  - Continue to tighten the filter by hand, till the filter is securely installed (about 3/4 turn).

Figure 41

- Clean the intercooler
  Use proper tools to remove foreign matter, like insect, leaves, etc.
  Use compressed air to clean dust.
- Clean the radiator and cooling system

- Clean the oil cooler
  - Use steam to clean the oil cooler core. This removes any remaining residue from the cleaner. Flush the fins of the oil cooler core. Remove any other trapped debris.
  - Wash the oil cooler core with hot, soapy water. Rinse the oil cooler core thoroughly with clean water.
  - Dry the oil cooler core with compressed air. Direct the air in the reverse direction of the normal flow.

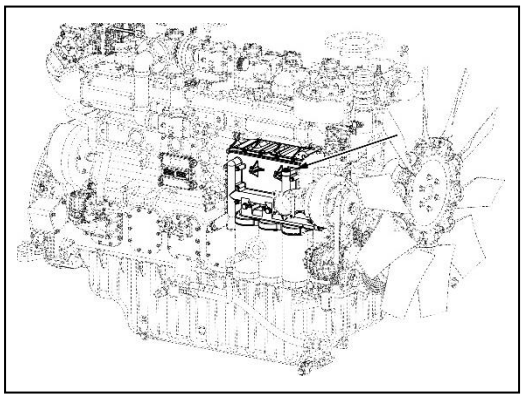

Figure 42

- Check the rocker arm and crossbar clearance
  - Check the clearance of intake valve and that of exhaust valve.

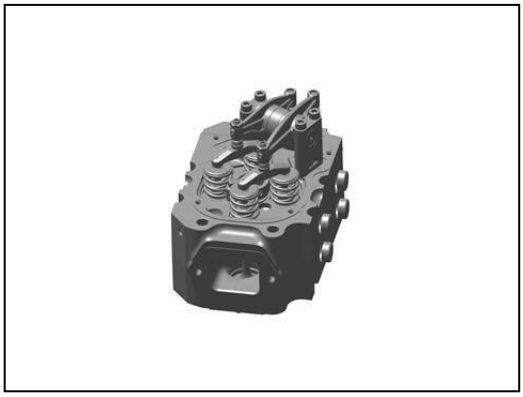

Figure 43

- Check the battery, battery electrolyte level, battery charger, battery cables, engine harness, and vehicle harness. Make sure all cable no damage.

- Check faults recorded in ECU
  - Reading the fault code via the 4G Software.
  - Check the "List of fault codes" to find the text explanation corresponding to each fault code.
  - You can get the current fault.
  - Clearing the historical errors.

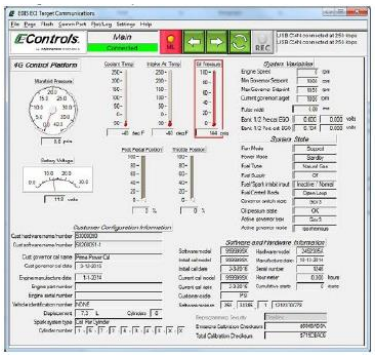

Figure 44

Maintenance Instructions - continued

- Check state and tightness of starter

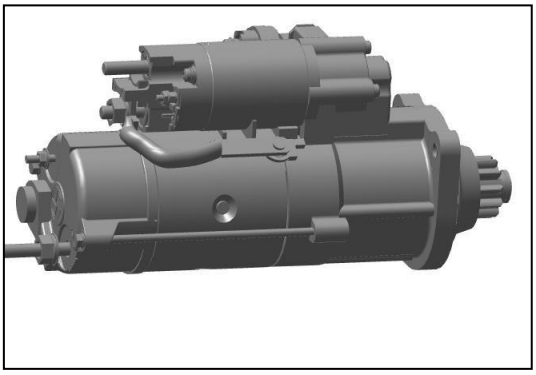

Figure 45

- Check state and tightness of alternator

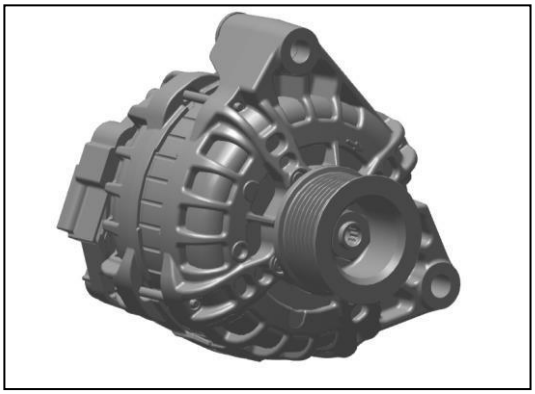

Figure 46

- Replace the spark plug
  - Spark plug clearance adjustment method: If the clearance is wide, insert a feeler into the clearance, and tap the corner of the side electrode gently with a small wrench; if the clearance is narrow, widen the clearance slowly with a vise, insert the feeler gauge, and then gently tap the side electrode with the wrench.
  - Spark plug clearance: 0.25-0.3mm (must be adjusted with a feeler gauge).
  - ATTENTION: Make sure that the side and central electrode faces are parallel!

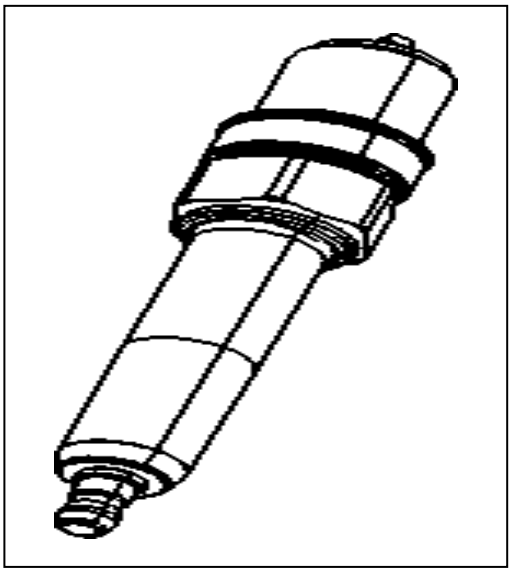

Figure 47

Maintenance Instructions - continued

- Check tightness of hoses and hoseclamps

- Check conditions and tightness of electrical connectors

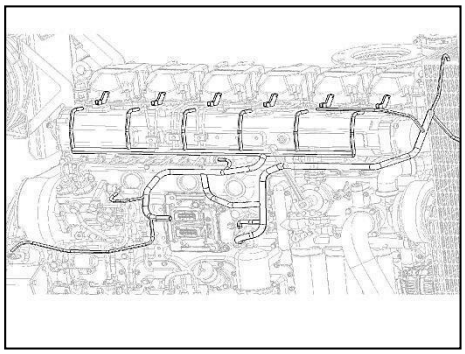

Figure 48

- Test operation of safety devices and alarm

- Replace the ignition coil
  - Use multi-meter to measure the resistance across the terminals to compare to the specs.

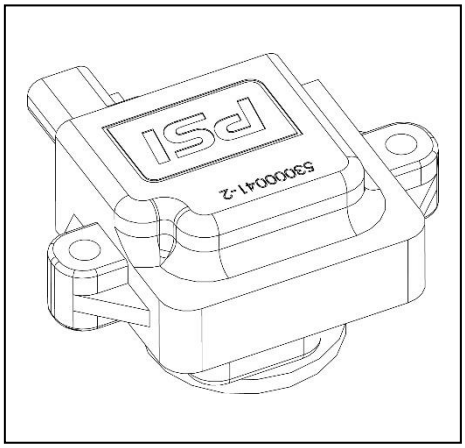

Figure 49

Maintenance Instructions - continued

- Walk-around inspection

  A careful and thorough walk-around inspect can find problems in advance and avoid costly losses and serious breakdowns.

  - Check for any type of leak, inspect the exterior of the engine to make sure there is no fuel, oil, and coolant leakage, if leak is observed, clean the leaking area, find the reason, and repair it.
  - Check if the vibration is in normal condition, and if the speed is stable. If the foundation vibration is more serious than before, stop the engine and check if there are problem on the engine parts or engine mounting system. If the problem cannot be solved, consult your PSI dealer.
  - During the normal running of engine, observe exhausts color, when the color is abnormal, check the cause and do troubleshooting.
  - Check the air inlet pipe for wear, damage, loose clamp, which causes dirt to enter the intake system.
  - Check the exhaust system for leaks, if leak is observed, find the reason, and repair it.
  - Check the wiring and the wiring harnesses for loose connection or wear.
  - Check the gas-supplying lines for leaks, if leak is observed, find the reason, and repair it.

Check the coolant pump, the pump seal is lubricated by coolant in the cooling system, it is normal for a small amount of leakage to occur when the engine cools and the parts contract. Excessive coolant leakage may indicate the need to replace the water pump sea

- **Push rod and tappet inspect**
  - Take out the push rod and check whether there is lubricating oil flowing from the ball socket of the push rod out, whether there is lubricating oil attached to the side, if there is less lubricating oil, we need to check whether the oil line of the rocker arm and rocker arm shaft is obstructed.
  - Clean up the push rod and check whether the push rod is bent, change it if needed.
  - Check for the wear on the ball head and concave head of the push rod, observe if the top of the ball head is worn out, check the width of the concave end of the push rod andwhether the bottom surface is worn out, if the ball head top or concave bottom is worn out, need to replace the push rod.
  - Visually inspect the surface of the tappet for wear. If wear is severe or there is grooves, cracks, pitting, and scratches, replace with new parts.

- **Turbocharger inspect**

NOTE:

Turbocharger bearing failures can cause large quantities of oil to enter the air inlet andexhaust systems. Loss of engine lubricant can result in serious engine damage.

Periodic inspection and cleaning are recommended for the turbocharger. Fouling of the turbinewheels can contribute to loss of engine power and overall loss of engine efficiency.

If the turbocharger must be removed for inspection, work with caution. Do not break deposits from the turbine wheel. Do not attempt to clean the turbine wheel. For information regarding removal and installation, see the repair manual or consult your PSI dealer. For information about repair of the turbocharger or about replacement of the turbocharger, consult your PSI dealer.

- Remove the exhaust outlet piping and remove the air inlet piping from the turbocharger.Visually inspect the piping for the presence of oil.
- Turn the compressor wheel and the turbine wheel by hand. The assembly should turn freely. Inspect the compressor wheel and the turbine wheel for contact with the turbocharger housing. There should not be any visible signs of contact between the turbine wheel or compressor wheel and the turbocharger housing. If there is any indication of contact between the rotating turbine wheel or the compressor wheel and the turbocharger housing, the turbocharger should be reconditioned.
- Check the compressor wheel for cleanliness. If only the inlet side of the wheel is dirty, dirt and/or moisture is passing through the air filtering system. If oil is found only on theback side of the wheel, there is a possibility of a failed turbocharger oil seal.

■ Maintenance Instructions - continued

The presence of oil may be the result of extended engine operation at low idle. The presence of oil may also result from restriction of the inlet air (Plugged air filters) or the PCV system. This causes oil to leak past the seal for the turbocharger compressor.

■ Water pump inspect

A failed water pump might cause severe engine overheating problems that could result in cracks in the cylinder head, a piston seizure or other potential damage to the engine.

Visually inspect the water pump for leaks. If leaking of the water pump seals is observed, replace all the water pump seals. Refer to the repair manual.

Inspect the water pump for wear, cracks, pin holes and proper operation.

Consult yourPSI dealer if repair is needed, or replacement is needed.

■ Clean oil suction strainer

NOTE:

Hot oil and components can cause personal injury. Clean the oil suction strainer afterthe engine oil has been drained.

- ◆ Remove the oil pan.
- ◆ Remove the oil suction strainer.
- ◆ Clean the oil suction strainer with cleaner.
- ◆ Inspect strainer assembly for good condition. Change a new strainer assembly, if necessary. Install the strainer assembly and the oil pan.

■ Inspect gear

Inspect the condition of the gears:

- ◆ Whether the tooth surface of each gear is peeling and broken.
- ◆ Whether the bearing surface of the bolt is crushed.
- ◆ Whether the threaded hole or through hole on the gear is deformed.

If replacement is necessary, consult your PSI dealer for assistance.

■ Inspect gear shaft

Inspect each intermediate gear shaft for:

- ◆ Peeling
- ◆ Pitting
- ◆ Discoloration
- ◆ Eccentric wear
- ◆ Clear wear stripes

If replacement is necessary, consult your PSI dealer for assistance.

■ Starter

Inspect the starter for proper operation. Listen for grinding when the engine is started. Inspect the teeth of the starter pinion and the flywheel ring gear. Check for patterns of wear on the teeth. Check teeth that are broken or chipped. If damaged teeth are found, the starter pinion and the flywheel ring gear must be replaced.

Problems with the electric starter can be caused by the following conditions:

- ◆ Malfunction of the solenoid
- ◆ Malfunction of the electric starting system.

Inspect the electrical system for the following conditions:

- ◆ Loose connections
- ◆ Corrosion
- ◆ Wires that are worn or frayed
- ◆ Cleanliness

Rebuild the starter if necessary. Consult your PSI dealer for assistance on the removal and installation of the starter.

■ Intercooler Inspect

- ◆ Check if there is any deformation.
- ◆ Check any debris or bump on the fins.

Clean

Remove the cover and inspect the fins. Most of the scale can be removed by nylon brush (fur brush is not permitted). Severe scaling can be removed with compressed air <5bar.It is allowedto use alkaline cleaning solution with PH <9 and it is strictly forbidden to use acidic cleaning solution.

Maintenance Instructions - continued

Test

There should be no leakage in one minute with 0.35Mpa compressed air blown in the intercooler.

- **Oil Cooler Clean**
  - Remove the core.
  - Turn the core upside-down to remove debris.
  - Back flush the core with cleaner.

  Severe scaling can be removed with compressed air <5bar.It is allowed to use alkaline cleaning solution with PH <9 and it is strictly forbidden to use acidic cleaning solution
  - Clean the core with steam to remove any residue. Flush the fins of the core. Remove any other trapped debris.
  - Wash the core with hot, soapy water. Rinse the core thoroughly with clean water.
  - Dry the core with compressed air. Direct the air in the reverse direction of the normalflow.
  - Inspect the core to ensure cleanliness. Pressure test on the core. If necessary,repair the core.
  - Install the core.

  For more information on cleaning the cores, consult your PSI dealer.

Test

Check any leakage at test: make sure there is no any leakage in one minute when the oil ductin pressure of (1.0-1.2) Mpa, water duct in pressure of (0.4-0.5) Mpa.

- **Intake and exhaust manifold**

  Inspect any crack or leakage from the manifold. If there is any problem, replace it as instruction of repair manual.

- **Cylinder head assemblies**

  The valves and the valve seats are worn over time. This causes the valves to recede into the cylinder head. This condition is called valve recession.

  To determine the wear condition between the valve seat and the valve, it is necessary to further measure the valve recession. Valve recession is the vertical distance between the valve bottom face and the bottom plane of the cylinder head.

  - Perform sealing pressure test of cylinder heads.
  - Measure the valve recession with a depth gauge.
  - Check whether the upper and lower end face of valve guide has eccentric wear,damage, etc. Measure inner diameter of valve guide with inner diameter gauge.
  - If valve recession and valve guide wearing exceeds the limit, need to rebuild the cylinder head.
  - Rebuild the cylinder head: replace new valves, valve seats, valve guides, valve stem seals all together if any of them need to be replaced.
  - Grind to ensure the seal ability between valve and valve seat.

Storage Protection Instruction

Necessity of Anti-rust Protection

If your engine is out of operation and in use for a period of time, then precautions should be taken to protect your engine from damage and to ensure proper operation when you re-operate the engine.

The recommendations indicated below are designed to prevent damage to the engine when it is withdrawn from service for a prolonged period. Use these procedures after the engine is withdrawn from service. Where necessary protect the engine against frost damage.

Storage Environment Requirement

If the engine is placed in storage area, the following precautions should be taken to protect it.

- **Equipment must be kept clean.**
  - Store indoors, cover it with a VCI plastic bag.
  - Keep the engine covered to avoid airborne dust and dirt.
  - Cover the ventilation openings, conduit connections, etc., to prevent entry of rodents, snakes, birds, insects, etc.
- **Keep the equipment dry.**
  - Store in a dry indoor area.
  - Temperature swings should be minimal to prevent condensation.
  - If stored in an unheated or damp building, space heaters will be required to prevent internal condensation.
  - Apply a rust inhibitor for unpainted flanges, shafts, drive discs, and fittings.
  - Check insulation resistance of all windings before starting the engine. Dry out the windings if reading is low.

Preparation before Storage

- Clean the engine for dirt, rust, grease, and oil. Inspect the exterior. Paint the damaged paint area with good quality paint.
- Remove the dirt from the air filter(s). Check all seals, gaskets, and the filter elements for damage.
- If the engine is stored outside, cover it with a waterproof canvas or other suitable protective material and use a strong waterproof tape.

Instructions for Short-Term Storage

- **Up to one week**
  - No special treatment is necessary.
  - Just clean the area around the engine body.

- **Up to three months**

Each week rotate the crankshaft by hand, in the normal direction of rotation (anti-clockwise as seen on the flywheel), a minimum of three revolutions.

Necessary Materials

- **VCI oil**

Volatile corrosion inhibitor (VCI) provides liquid and vapor protection to ferrous metal surfaces against corrosion caused by moisture. In a closed compartment, protection is either by direct contact with VCI oil or by contact with VCI vapors. Contact your local supplier for similar type of oil.

VCI oil can be used in all tanks, engine, hydraulic tank, power steering tank, transmission, differential, and other components. The inhibitor is an oil stabilizer and rust preventive.

For correct use of VCI oil, the engine must be sealed when stored. VCI oil is so volatile that any opening left unsealed will allow the vapors to escape, causing the engine to loseprotection.

Note:

- **VCI oil should not be used full strength on non-ferrous metals where the inhibitor will have direct, prolonged contact.**
- **The inhibitor can be used in combination with any petrochemical. Apply by using a spraying or fogging pattern. The VCI oil must be diluted according to the instruction of suppliers.**

VCI oil cleaning method

- Drain the VCI oil from the engine.
- Refill standard-compliant engine lubricating oils.
- Operate the engine for 5 minutes at low idle rated speed.
- Drain the oil completely and refill new lubricating oil.

- **Sprayer**

Load the VCI oil dilution into the sprayer, then can be used to prepare the engine for storage.Change the nozzle adjustment to provide either a spray or a fog pattern.

VCI oil dilution: mixture of 50 percent VCI oil and 50 percent engine oil.

- **Plastic bag**

Use ultraviolet light resistant plastic bags. The bag must have a minimum thickness of 0.10mm (0.004 inch) if the bag is filled with Volatile Corrosion Inhibitor (VCI) oil.

- **Waxed paper**

Wax paper is a surface-coated wax that has excellent water and oil resistance. Wrap parts and sealing to prevent rust.

- **Adhesive tape**

Use a sealing tape with appropriate adhesive properties. DO NOT use duct tape because duct tape gets loosen over time. Rolls of sealing tape that are 2 inches wide are recommended.

An appropriate quality sealing tape is available from the following suppliers: 3M Product Information Center.

Long Term Storage（More Than Three Months）

- **Lubricating oil system**

Drain and replace the crankcase oil and change the oil filters.

Add VCI oil to the crankcase at the rate of 3 to 4 percent by the volume of the crankcase. Or use special engine rust-proof oil, such as Houghton Ensis Engine Oil 30、Shell Rimula R6lm, or other equivalent effects product, please follow the supplier's instructions.

Note:

If the engine crankcase is full, drain enough engine oil so the mixture can be added.

- **Coolant system**

Drain the coolant and flush the cooling system, such as engine blocks, separate circuit after-coolers, and other related components. It is not necessary to have engine stored for less than three months. However, for extended storage periods of three months or longer, it is recommended that the cooling system to be drained, flushed, and refilled. Refill with appropriate coolant.

Recommend Total Glacelf Auto Supra concentrates、Basf Glysacorr P113 concentrates, or other equivalent effects product, please follow the supplier's instructions.

Note:

- **If the stored engine is subjected to below freezing temperatures, completely drain the freshwater system. Drain the system by removing the drain plugs from the engine block, oil cooler, heat exchanger body, and radiator.**
- **The mixture must NOT contain less than 50% inhibited ethylene glycol or propylene glycol and may contain up to 70% by volume.**

Fresh Water Systems

Drain the coolant from cooling system and thoroughly flush with the clean water. The system then should be refilled with mixture of clean water and any of the coolant preservative containing VCI. If the storage is less than three months, drain mixture of clean water and any of the VCI coolant from cooling system after finished running of the engine.

Raw Water Systems

Completely drain the raw water system by removing all the drain plugs from the raw water pump, water shield manifolds, heat exchanger bonnets, and aftercooler. After the system has been drained, inspect all zinc plugs (normally painted red) for corrosion damage.

Note:

To ensure complete drainage and evaporation during storage, DO NOT install the drain plugs and zinc plugs. Place all removed plugs in a cloth bag and fasten the bag to the engine for storage.

Caution: When finished all above operations of lubricating oil system and coolant system, then start the engine for 5 minutes at low idle rated speed.

Turn off the engine and wait about 30 minutes to get it cooled completely, then make operations as follows.

- **Combustion chamber**

Spark plug

Remove the spark plugs and apply 30 ml (1 oz) of VCl oil mixture (50 percent VCI oil and 50 percent engine oil) in each cylinder.
Use a bar or turning tool to rotate the engine slowly to put the oil on the cylinder walls. Install all the spark plugs and tighten to the correct torque.

- **Intake and exhaust system Air filter**

Remove the air filter elements. Seal the air filter inlets, with VCI plastic bag and adhesive tape. Use the starter to drive the engine, but no fuel. Then use a sprayer to add VCI oil dilution into the air inlet and turbocharger inlet, while cranking multiple times for a total of 60 seconds.

Exhaust openings

Use a sprayer to apply VCI oil dilution into the exhaust openings. The minimum application rate is 5.5 ml per L (3 oz per 1000 cu in) of engine displacement. Seal the exhaust pipe, including any drain holes in the muffler.

Vents

All vents i.e., engine inlet pipe, exhaust pipe, air cleaner inlet, coolant inlet & outlet, crankcase breather, the crankcase breather and all other openings etc. must be carefully sealed with VCI plastic bag and adhesive tape.

Note:

VCI oil mixture can also be added to the inlet by removing the plug for checking turbocharger boost pressure. The minimum application rate is 5.5 ml per L (3 oz per 1000 cu in) of engine displacement.

- **Electrical system Battery**

If battery is provided for engine starting, it should be disconnected and stored in a cool, dry place after ensuring electrolyte level (refill with distilled water if necessary). It is recommended to recharge the battery once in a month.

Starter

Clean the electric starter and wiring harness, keep them dry, then cover the alternator in moldable waxed paper, and seal with adhesive tape.

Alternator

Cover the alternator in moldable waxed paper, and seal with adhesive tape.

Engine wiring harness

Clean the engine wiring harness and keep it dry.

The others V-belt

Loosen all the belts (tension, fan, alternator, etc.).

Flywheel

Spray a thin amount of VCI oil mixture on the flywheel, ring gear teeth, and starter pinion. Install the covers to keep in the VCI vapors.

Note:

Use a VCI plastic bag to cover the engine. Ensure the engine cover is secure, but loose enough to allow air to circulate around the engine to prevent damage from condensation, and put some desiccants, then seal with the adhesive tape.

Attach a tag to the engine with a notation of the date that the unit was preserved. Remove the waterproof cover every three months and check the engine for corrosion. If the engine has signs of corrosion at the check period, repeat the protection procedure.

Maintenance Instructions - continued

Removal from Storage

Refer to the appropriate section for detailed services listed below or have your authorized servicing dealer or engine distributor perform services that you may not be familiar with.

- Remove all the outside protective covers. Unseal all the openings in the engine and removethe covering from electrical systems.
- Drain the oil and refill with new lubricating oil. Change the oil filters.
- Drain the VCI coolant from the engine. Use clean water to flush any compartment that contains VCI coolant to remove all residuals. Then drain the clean water and refill with new coolant.
- Check the battery level.
- Check the condition of the fan and alternator belts. Replace the belts, if necessary. Tighten the belts as specified in the Operation & Maintenance Manual.
- Check the engine harness if the harness is not aging. Replace the harness, if necessary.
- Remove the batteries from storage. Install batteries (fully charged) and connect the electric wires.
- Install fan/alternator poly-vee belt if removed earlier.
- Perform all appropriate pre-starting checks.
- Please assemble all the other parts back to the engine.

Initial Running after Storage

The purpose of this operational check is to ensure that the correct pressures and temperatures are maintained in the lubrication, cooling, and fuel systems. Also, this operation ensures that any leaks are corrected.

To ensure a safe operation, use the following procedure:

- Before starting the engine, use a hand oil pump or electric pre-supply pump to establish the oil pressure of the engine.
- Crank engine for 20 seconds with starter (do not allow the engine to start). Wait 2 minutes and crank the engine for an additional 20 seconds to assure the bearing surfaces are adequately lubricated.
- Start the engine and run at low idle and no load for several minutes. Warm up carefully and check all gauges before placing engine under load.
- Check regularly for leaks such as oil, coolant, and gas during the first few hours of operation. Repair any leaks as soon as detected.

The minimum requirements for engine start-up and break-in are listed below. These steps are necessary in order to ensure proper break-in of engine components and minimize premature engine wear.

Break-In Procedure

Time	Time (Min)	Engine Speed (rpm)	Engine Load	Test Procedure
0 -15min	2	1800	0%	**Start and run engine after filling radiator until thermostat opens. Continue to run for 5 min after thermostat has opened. Ensure that coolant level does not drop and temperature is stable. Shut engine down and check coolant and oil level.**
15 - 45 min	30	1800	50%	**Break-in**
45 - 60min	15	1800	75%	**Break-in**
60 - 70min	10	1800	100%	**Load check**
-	-	1800	0-100%	**Optional customer requested performance testing**
End of Test	10	1800	0%	**Cool down**

Check all kinds of indicators to confirm that there is no abnormality, if there are any abnormal parameters, please handle it promptly.

LONG-TERM STORAGE

One to Six Months

Storage preparation:

If the engine or machine is to be placed in storage for a period of one to six months, it is recommended that the following steps be followed:

- Store indoors with a consistent temperature and low humidity, if possible.
- Protect the air cleaner inlet from water entry.
- Protect the exhaust outlet or muffler outlet from water entry.
- Check the coolant strength and top off radiator.
- Use a weatherproof storage bag, with desiccant bag inside, for extra protection. **At the end of each and every three-month storage period:**
- Carefully check all drive belts, paying particular attention to the point where the straight run of the belt starts to bend around the pulley. Check the vee groove in the pulley for corrosion.
- Check the level of coolant (must be anti-freeze inhibited).
- Check the level of oil in the sump on the dipstick.
- Rotate crankshaft by hand to re-distribute load on the valve train and to keep seals from becoming stuck. Be sure engine rests in a different position (-180 degrees).
- If battery is still installed in unit, slowly recharge battery. This can be done every month to extend the service life of the battery.

Storing an engine over Six months:

Storage preparation:

Follow all above recommended procedures, plus do the following:

- Drain the engine crankcase and refill with recommended oil.
- Change the oil filter.
- Disconnect and remove the battery.
- Clean exterior surface of the engine.
- If the engine is equipped with an automotive type clutch or PTO clutch, make sure that the clutch is disengaged.

LONG-TERM STORAGE - continued

Storing an engine over Six months:

At the end of each six-month storage period:

- Check that existing preservation of all external surfaces is sound and complete, paying particular attention to crankshaft lip seal surfaces, re-preserve as necessary.
- Ensure that all open aperture protective covers (air intake, exhaust manifolds, etc.) are securely positioned.
- Perform all 3-month inspections previously listed.

Note: The lubricating oil and fully primed filter must be replaced with oil to the listed specification every twelve months, even though the oil has not been used. Oil left standing in an engine will oxidize and can be contaminated by condensation within the crankcase.

Removing an engine from storage

When removing an engine or machine from storage, the following steps should be taken to be sure the engine is in proper operating condition:

- Remove all protective storage coverings from engine / machine.
- Check engine oil level. If engine has been dormant for over 12 months change engine oil and filter.
- Check engine coolant level. If engine has been dormant for over 12 months, drain and refill with fresh coolant.
- Inspect drive belt system. Check for cracks in belt and corrosion on pulleys. Replace and clean as needed. If applicable grease pulley bearings.
- Install a new or fully charged battery. If installing a used battery check electrolyte level.
- Inspect all engine systems thoroughly for leaks, tears, broken wires, etc.
- Rotate engine by hand at least 360 degrees before attempting to start to be sure engine rotates smoothly.
- When starting engine, reference *Break-In Procedure*.

After engine has successfully reached operating temperature shut down and re-check all fluid levels and systems.

APPENDIX: USING THE 4G SOFTWARE

Your PSI HD engine is controlled by an engine control module (ECU). To monitor engine parameters, record plot files, and check fault codes, the ECUs must be connected to a computer via an ECOM cable. ECOM cables are available through the PSI Aftermarket Parts Department. ECOM cables ship with a CD containing the required installation files for the software.

To install the 4G software, follow the instructions included on the ECOM cable CD. Be sure to install the ECOM cable driver first, then the 4G software.

Connecting to the Engine

To connect to the engine, plug the ECOM cable into the white diagnostic connector located on the left side of the engine near the ECUs. Plug the USB cable from the ECOM into your computer and start the 4G software. You will be asked for a password. The password can be found on the CD supplied with the ECOM cable. If entering a password for the first time, be sure to check the box marked "Save Password and SIN" so you won't have to re-enter the password next time you open the software. Do not check the "Single Serial Number Access" box.

Press OK, and the software will open. If you are connected, the status bar at the top of the screen will have a green box that says "Connected".

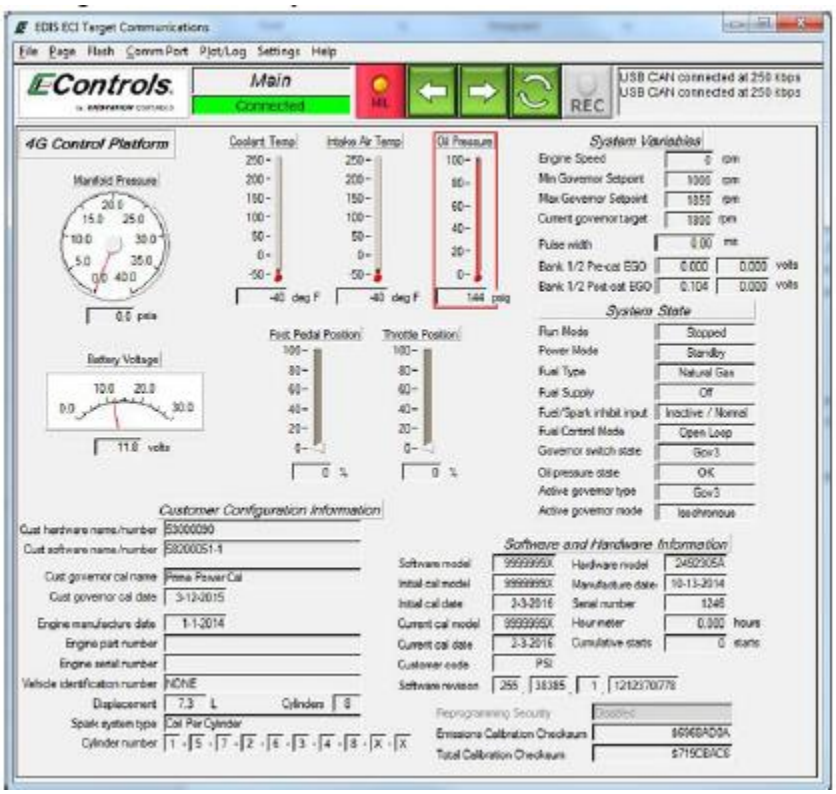

Figure 50

USING THE 4G SOFTWARE - continued

If your computer will not connect, you may need to briefly crank the engine to get the ECU out of sleep mode. Begin a start sequence on the engine, and once the engine starts to crank stop it. This should wake the ECU up and it should connect to the computer.

You can have two copies of the software running at once. Once the password is entered, and the window is opened, click "Comm Port" on the menu bar at the top of the window, then click "Configure ECOM..." In the ECOM configuration window, change the Target CAN Address from 0 to 1 and press OK.

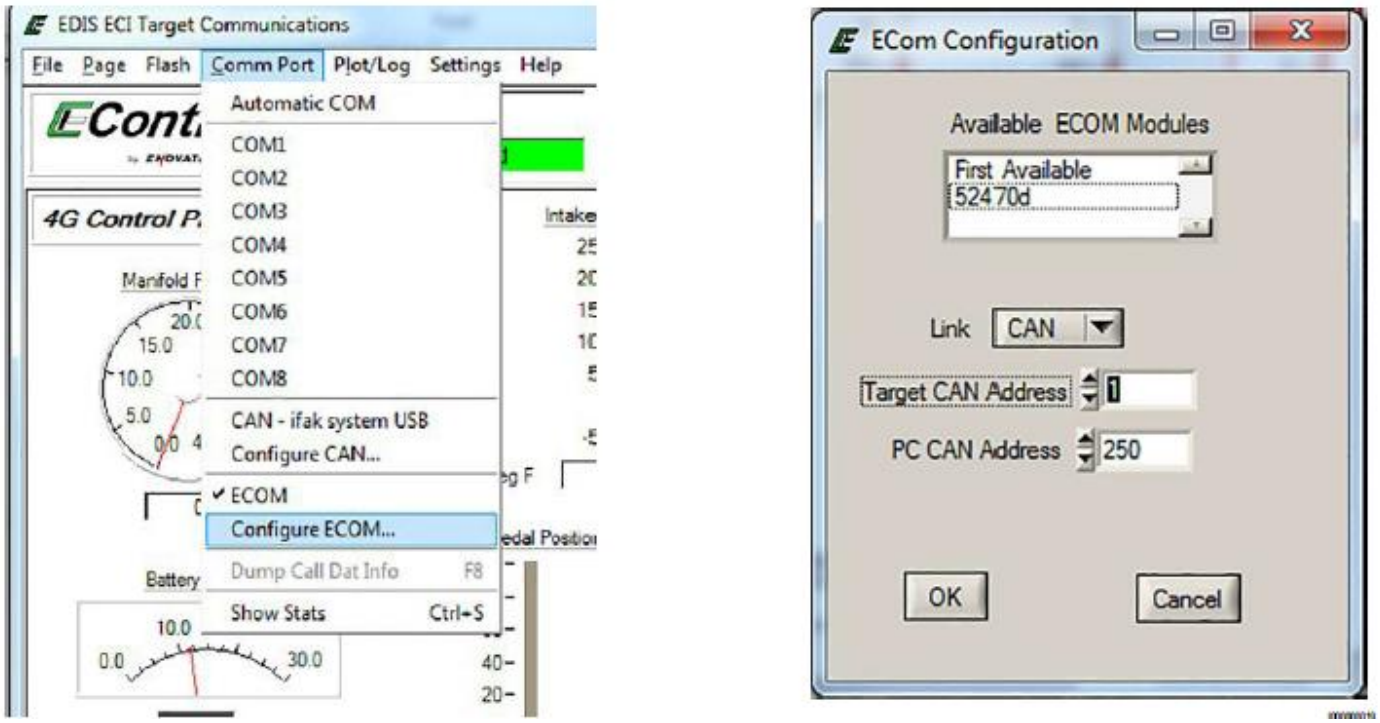

Figure 51

Unplug the ECOM cable from the USB port on your computer and plug it back in again to reset the connections. You should now have one window reading the Master ECU data and one reading the slave ECU data. To verify this, navigate to the Marine page by clicking Page on the menu bar at the top of the screen and selecting Marine. On the left side of the page, you'll see a heading titled "Multi-Engine Configuration". Multi-engine status will display either Master/Single for the master side or Slave for the slave side, depending on which ECU the software is connected to.

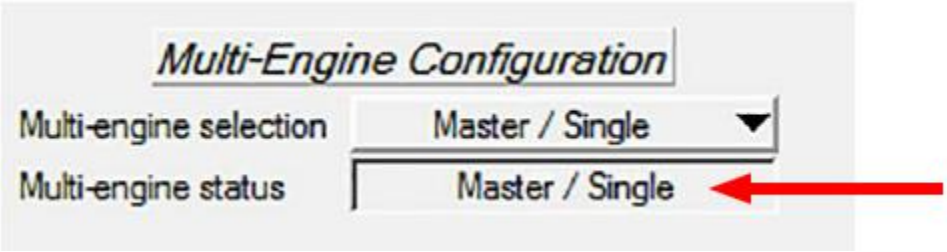

Figure 52

Checking Faults

At the top of the screen, click on "Page" and then click on "Faults".

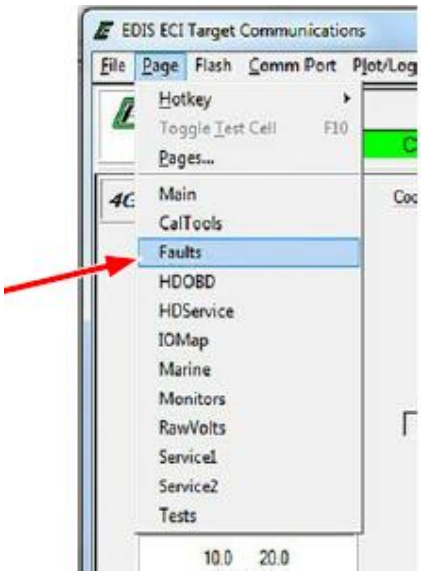

Figure 53

It may take some time for all the data to populate when opening the Faults window. You also may get notices about the connected ECU having more fault definitions than the 4G software. This is OK, it just means your 4G software is an older version. The software will still function normally.

There are three boxes at the bottom of the Faults page — Historic Faults, Active Faults, and Pending Faults. Historic faults are faults that occurred in the past, Active Faults are faults that are occurring right now, and Pending Faults are faults where a parameter is above or below a threshold that will cause a fault, but not enough time has passed for the fault to become active yet.

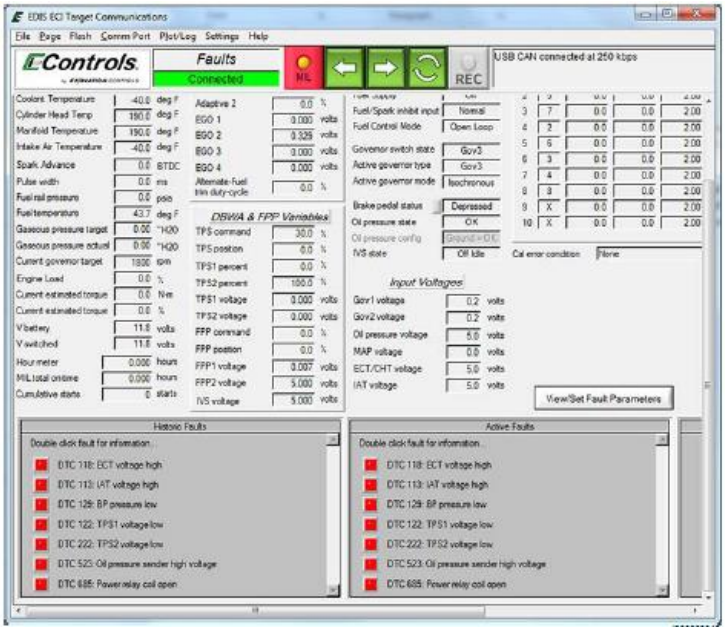

Figure 54

To get more information on a historic fault, double-click on the fault. This window will open.

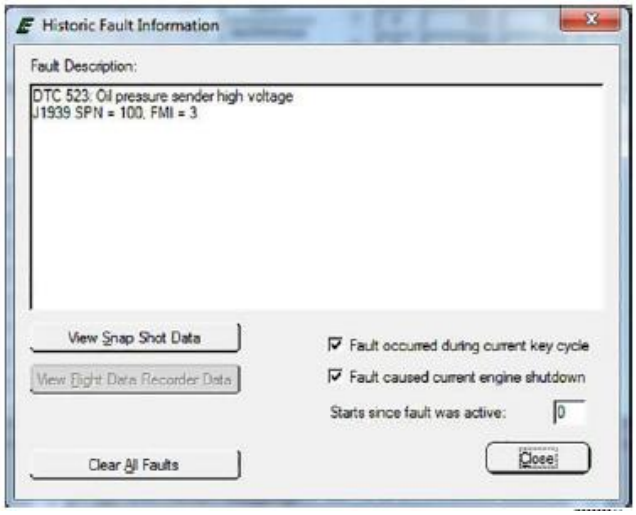

Figure 55

Fault occurred during current key cycle: This box will be checked if the fault has happened since the last time the engine was started.

Fault caused current engine shutdown: This box will be checked if the engine was shut down because of this fault. There can sometimes be more than one fault that triggers a shutdown at the same time.

Starts since fault was active: This counter goes up with each engine start since the fault went from active to historic. This can be particularly useful when troubleshooting because it helps eliminate "red herrings". If you have an unexpected shutdown and are showing three historic faults, two with 0 starts since fault was active and one with 27, you can focus on faults with 0 starts, since they are more recent.

View Snapshot Data: Pressing this button will bring up a window that shows engine hours at the time of the fault along with a bunch of engine parameters at the time the fault went active.

This information can be saved to the computer to be reviewed later or emailed by clicking the Save button.

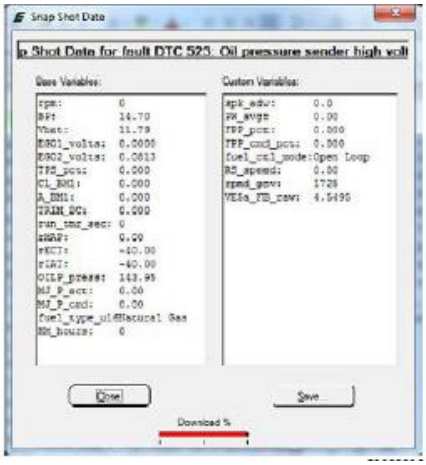

Figure 56

View Flight Data Recorder Data: Pressing this button will pull up a small plot file listing several different parameters and showing how they trended eight seconds before, and 2 seconds after the occurrence of the fault.

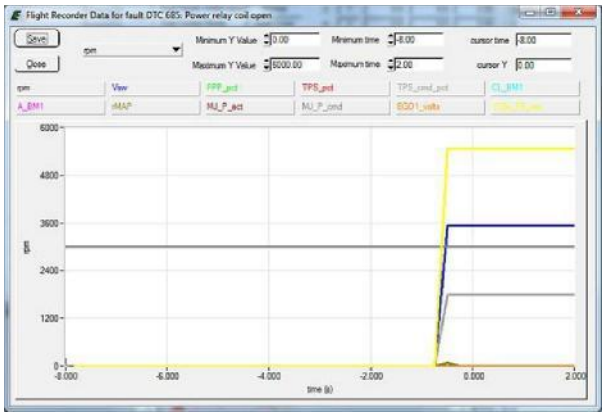

Figure 57

These files can also be saved for later review. Please note that this option is not available for many faults, and the button will be greyed out.

Clicking on any of the faults in the Historic box will give you the option of clearing either the single fault you clicked on or clearing all stored historic faults. Be sure you have collected all the data you need before clearing faults, as there is no way to recover the data once it has been cleared.

Recording a Plot File

Using a Template: To use a previously recorded plot file as a template, click "Plot/Log" on the menu bar, then click "Load Recorder Settings..." Select the plot file to use as a template and press OK. You will notice any parameter that is being plotted will turn green, and the "REC" box at the top of the screen will go from black and white to green with a large red dot in the middle. As long as the record box is colored, the software is recording regardless of whether the plotter window is open.

To see the plot as it's recording, click "Plot/Log" then "Plot Tags" or simply press the P key on the keyboard to open the plot window.

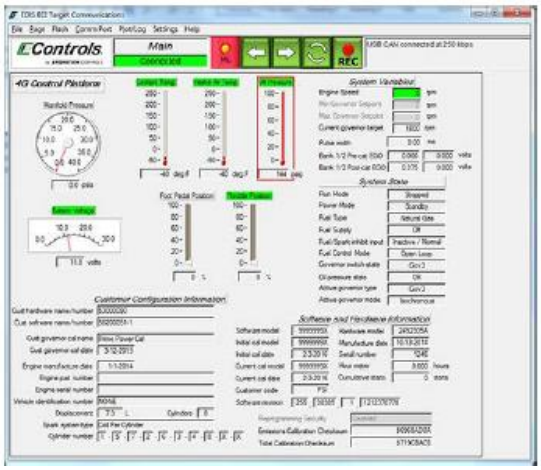

Figure 58

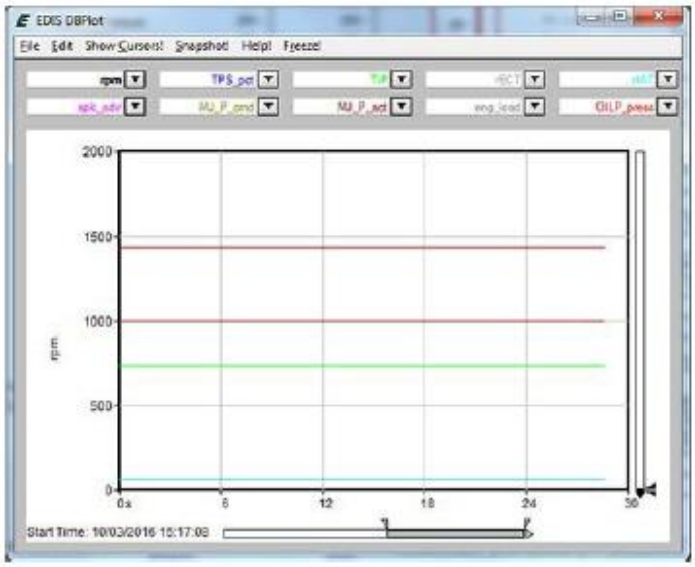

Figure 59

To change the parameters being displayed on the plot, click on the arrow next to the parameter name at the top of the screen. Although only 10 parameters can be displayed on the plot at once, all flagged parameters are being always recorded.

Manually tagging parameters: To manually tag a parameter to be plotted, find the parameter in the 4G software and right-click on it. The parameter will turn green, indicating that it is being recorded

Making marks: To make a mark in a plot file, press M. A window will open allowing you to type comments on the plot. This is useful to note running characteristics, load changes, ambient conditions, anything that could be useful for someone looking at the plot.

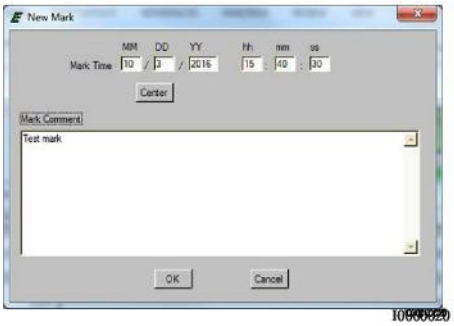

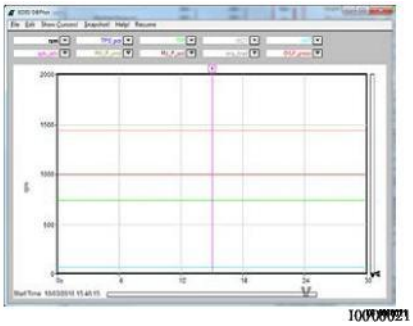

Figure 60

Saving plot files: To save a plot file, click File on the menu bar at the top of the plot window, then click Save... Click the Browse button to choose a location and filename for your plot file, then press OK in the Browse window and Save in the save window. **All unsaved data is erased when the 4G software is closed, so be sure to save all plots before closing the software!!**

Starting a new plot file: If you'd like to delete all previously recorded data and start a new plot file, click the "REC" button at the top of the page. This will stop the recording process and clear out all recorded data. A warning will pop up to verify that you want to clear all data — click Yes to proceed. **Data cannot be restored once recording is stopped so make sure your plot is saved if you want to keep it.**

Figure 61

To restart the recorder, press the "REC" button again, or press P to open the plot window and begin recording a new plot.

Appendix

Coolant Recommendation

The coolant ensures the best efficiency of the cooling system and protection against corrosion(chemical and galvanic). It improves also boiling temperature, resistance to rust and avoids scale deposit formation.

- The coolant used in PSI engines should meet the **ASTM D6210** standard, and the coolant used in PSI engines should not contain **2-ethylhexanoate**, which has compatibility problems with silicone rubber.
- Do not use a commercial coolant that only meets the **ASTM D3306** specification. This type of coolant is made for light-duty engine applications.

- **Important Note**

45% glycol content is the minimum required values to maintain the best boiling temperature. Do not use ethylene glycol content that exceed **60%**.

Variety	Freezing/Boiling Point (°F)	Recommended Type	Engine Coolant Capacity (gal)
OAT Long-Life Engine Coolant	**-34 / 265**	**Chevron Delo XLC Antifreeze/ Coolant 50/50 Mix**	**33.5 gal (old Radiator) 46.8 gal (new Radiator)**

Appendix - continued

Lubricant Oil Recommendation

It is important to comply with the oil drain and filter change intervals to guarantee the proper operation of your equipment.

PSI recommends that the oils that are formulated specifically for heavy duty gas engines should be used.

PSI recommends that the oils that formulated with Group II base stock should be used. PSI recommends the use of oils that have the sulfated ashes lower than 0.5% (weight). That can produce fewer deposits on the valves and pistons and extend the service life of the engine.

PSI recommends taking oil samples periodically, the samples should be evaluated by an accredited lab to monitor the quality of the oil over time.

SAE No.	Sulfated Ash Content by Weight	Engine Oil Capacity (min/max)	Recommended Oil
15w-40	0.25 - 0.5%	39.5 qts / 65.5 qts	Chevron HDAX 5200 Low Ash Gas Engine Oil

■ **Viscosity**

As the viscosity of lubricating oil is dependent on temperature, the choice of SAE grade should be governed by the ambient temperature prevailing at the engine operating site. Should the temperature fall temporarily below the limits of the SAE grade selected, cold starting may be affected but the engine will not be damaged. To keep wear to a minimum, do not exceed application limits for extended periods of time. Synthetic lubricating oil features an improved temperature and oxidation stability.

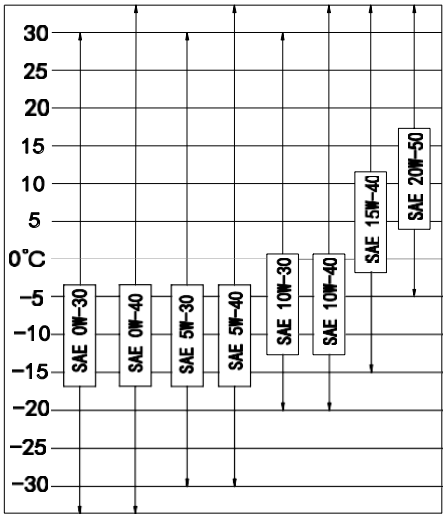

Figure 62

Viscosity selection must be based on ambient temperature

Appendix - continued

Viscosity and temperature properties specification

Project	Low-temperature kinematic viscosity /mPa·s(℃）≤	Viscosity（100℃）/mm²/s	High-temperature and high-shear viscosity（150℃, $10^6 s^{-1}$）/mPa·s ≥	Pour point/℃ ≤
Test method / Viscosity grade	ASTM D5293	ASTM D-445 /ISO 3104	CECL-36-T-84 ASTM D4741-87 ASTM D 4582-95 ASTM D4624-93	ASTM D 97
0W-20	6200(-35)	5.6～<9.3	2.6	-40
0W-30	6200(-35)	9.3～<12.5	2.9	
0W-40	6200(-35)	12.5～<16.3	2.9	
5W-20	6600(-30)	5.6～<9.3	2.6	-35
5W-30	6600(-30)	9.3～<12.5	2.9	
5W-40	6600(-30)	12.5～<16.3	2.9	
5W-50	6600(-30)	16.3～<21.9	3.7	
10W-30	7000(-25)	9.3～<12.5	2.9	-30
10W-40	7000(-25)	12.5～<16.3	2.9	
10W-50	7000(-25)	16.3～<21.9	3.7	
15W-30	7000(-20)	9.3～<12.5	2.9	-25
15W-40	7000(-20)	12.5～<16.3	3.7	
15W-50	7000(-20)	16.3～<21.9	3.7	
20W-40	9500(-15)	12.5～<16.3	3.7	-20
20W-50	9500(-15)	16.3～<21.9	3.7	
20W-60	9500(-15)	21.9～<26.1	3.7	

Appendix - continued

Gas Recommendation

For up to date fuel recommendations, refer to PSI technical document 56100019, PSI Power Systems Fuel Standard.

Appendix - continued

PSI Special Tools

No.	Name	3D Model
1	Piston installing guider	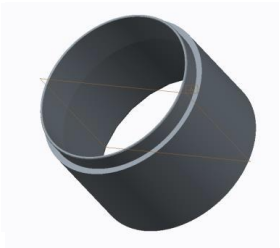
2	Crankshaft rotating tool	
3	Rear oil seal installer	
4	Front oil seal installer	

Appendix - continued

No.	Name	3D Model
5	Flywheel brake	
6	Cylinder liner installer	
7	Flywheel hanger tool	
8	Camshaft mounting tool (aluminum)	
9	Valve collet assembling tool	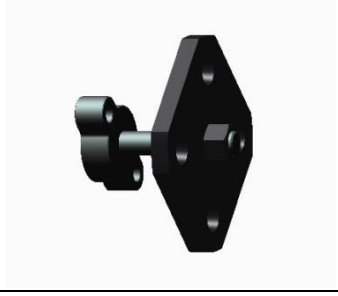

Appendix - continued

No.	Name	3D Model
10	Cylinder block expansion tool	
11	Piston extraction tool	
12	The 21# socket tools	
13	Camshaft bush installer	

Appendix - continued

Common Faults and Troubleshooting

Troubleshooting

Refer to Diagnostic Manual for troubleshooting and diagnostic faults.

Power Solutions International, Inc (PSI)
201 Mittel Drive
Wood Dale, IL 60191 USA
630-350-9400